OP830 （OP330）Electronic Operating Table
User Manual

Attention

Beijing AEONMED Co.,Ltd. (hereafter referred to as Aeonmed)holds the copyrights to this non-public published manual, and reserves the rights to keep it as a secure document. Refer to this manual when operating, maintaining and repairing Aeonmed products only. Only Aeonmed may provide permission for the use of or copies of this document to others.

Proprietary materials protected by the copyright law are included in this manual. No section of it may be duplicated, copied, or translated into other languages without prior written approval from Aeonmed who reserves the copyright.

Everything written within this manual is considered to be correct, but it is not a substitute for the exercise of professional judgment. Aeonmed is not legally responsible for any mistakes printed within and/or any damages caused by incorrect installation and operation of equipment. Aeonmed does not supply privileges endowed by the patent law to any other parties. Aeonmed is not legally responsible for the results caused by patent law breaking or any rights of the third party violating.

Before Using the Aeonmed products, every user has to read this manual carefully. This manual includes the steps which should be paid attention to, the operations which may cause exceptions and the hazards which may be harmful to people and machines. Aeonmed will neither assume the responsibilities of safety, reliability and performance nor provide free maintenance if every abnormal phenomena or the hazard harmful to people and machines, caused by the operations which should be avoided in this provision, happens.

Changes can be made to the contents contained in this manual without prior notice.

Manufacturer's Responsibility:

Aeonmed is responsible for the security, reliability and function of the equipment when the following conditions are adhered to:

- Installation, adjustments, fixes and repairs must be performed by individuals authorized by Aeonmed;
- Necessary electrical equipment and the working environment must be in accordance with national standards, professional standards and the requirements listed in this manual;
- This equipment must be used as instructed in these operating instructions.

⚠ **CAUTION: This equipment is not for personal or home use.**

⚠ **CAUTION: For safe and effective use of this equipment, maintenance according to Aeonmed specifications is necessary. Aeonmed is not responsible for injuries that result because of poor maintenance that is not in accordance with the procedures in this manual.**

Technical and Service Information will be supplied according to customer requirements by Aeonmed. Calibration methods and instructions will be supplied by Aeonmed at Aeonmed's discretion to allow the customer, under the assistance of qualified technicians, to repair the equipment where this can be done by the customer himself.

Warranty:

Manufacturing techniques and materials:

For a period of one year from the date of original delivery to the customer, the components and assemblies of this product are warranted to be free from defects caused by manufacturing techniques and materials, provided that the equipment is properly operated under conditions of normal use and that the equipment is regularly maintained per requirements specified by Aeonmed. The warranty period for other

仅用于2017-ZHBJ-2056项目招投标使用
仅用于2017-ZHBJ-2056项目招投标使用
仅用于2017-ZHBJ-2056项目招投标使用

parts is three months. Consumable parts are not included in this warranty. Aeonmed's obligation under the above warranty is limited to repairing the equipment free of charge.

Freedom from Obligations:

- Aeonmed's obligation under the above warranties does not include freight and other fees;
- Aeonmed is not responsible for any direct or indirect product damage or delays which result from: improper use; alteration by using the assemblies in an unapproved configuration; and maintenance by anyone other than Aeonmed or Aeonmed's appointed representatives;
- This warranty does not apply to the following situations:
  Improper use;
  Machines used without the proper maintenance or damaged;
  Aeonmed's original serial number label or mark is removed or replaced.

Security, reliability and operating condition:

Aeonmed is not responsible for the security, reliability and operating condition of this product in cases where:

- The assemblies are disassembled, modified and readjusted.
- The product is not operated correctly in accordance with these User manual instructions.
- The AC power used or the operating/storage environment does not follow the requirements in this manual.

Return

Follow these steps in case the product must be returned to Aeonmed:

1. Obtain the right of return (Return Material Authorization number)
   Contact Aeonmed Customer Service and inform us of the part number and type of the product. The part number is marked on the surface of the product. Return is not allowed if the number cannot be identified. Receive an RMA number from Aeonmed and mark it on the exterior of the product packaging. Enclose a statement of the product number, product type and also the reason for return.

2. Transportation charges
   Transportation and insurance charges must be prepaid by the user for transporting the product to Aeonmed for repair (including the custom and other fees for machines of non-mainland China).

仅限于2017-ZHBJ-2056项目招投标使用
仅限于2017-ZHBJ-2056项目招投标使用
仅限于2017-ZHBJ-2056项目招投标使用

Using Guidance

Thank you for choosing this Aeonmed product.

In order to use the product correctly and effectively, please read these operating instructions carefully and completely before using the product for the first time.

When using the product, please proceed in accordance with the information provided in these operating instructions on the basis of fully understanding the information in this manual.

This product is only for intended use as described in these operating instructions.

Only specially trained service professionals are authorized to carry out maintenance and functional checks on this product.

Please contact Aeonmed for guidance in the case of questions regarding any applications of this product. Aeonmed will do its best to offer users effective assistance.

The specifications of this product are subject to change without prior notice.

仅限于2017-ZHBJ-2056项目招投标使用
仅限于2017-ZHBJ-2056项目招投标使用
仅限于2017-ZHBJ-2056项目招投标使用

仅限于2017-ZHBJ-2056项目招投标使用
仅限于2017-ZHBJ-2056项目招投标使用
仅限于2017-ZHBJ-2056项目招投标使用

Manufacturer： **Beijing AEONMED Co.,Ltd.**

Registered address： **The No.2 building, 11B in Science City, Fengtai District, Beijing (Park)**

Address of manufacturing site： **The No.2 building, 11B in Science City, Fengtai District, Beijing (Park)**
The No.4 building, No.135, Guowei Road, Yangpu District, Shanghai
No. 10, Chaobai Street, Yanjiao Development Zone, Sanhe Dsitrict, Hebei

Name of after-sales service ： **Beijing AEONMED Co.,Ltd.**

Address of after-sales service： **The No.2 building, 11B in Science City, Fengtai District, Beijing (Park)**

Postal code： **100070**

Tel： **010-83681616**

Fax： **010-63718989**

Hotline： **800-810-8333**

Website： **http://www.aeonmed.com/**

Contents

1 Foreword 1-1

1.1 What is the OP830/330 Electronic Operating Table? 1-1
1.1.1 Intended Use 1-1
1.1.2 Contraindication 1-1
1.1.3 Composition of this equipment 1-2
1.2 Symbols in this operating instructions and on the equipment 1-3

2 Introduction to the Electronic Operating Table 2-1

2.1 Table movement control units 2-1
2.2 Locking knobs 2-4
2.3 Handles 2-4
2.3.1 Kidney bridge adjustment handle 2-4
2.3.2 Leg plate abduction locking handle 2-4
2.4 Sockets 2-4
2.4.1 Sockets for corded hand control 2-4
2.4.2 Sockets for mains / AC power 2-4
2.4.3 Equipotential sockets 2-4
2.5 Cushion 2-5
2.6 Accessories 2-5
2.6.1 Clamps 2-5
2.6.2 Anesthesia screen 2-5
2.6.3 Arm rest 2-5
2.6.4 Lateral support (optional) 2-5
2.6.5 Body strap（optional） 2-5
2.6.6 Knee crutch（optional） 2-5

3 Operation guide 3-1

3.1 Preparation for operation 3-1
3.2 Adjustment of table top 3-2
3.2.1 Table top up / down 3-2
3.2.2 Table top Trendelenburg/ Reverse-Trendelenburg 3-3
3.2.3 Table top lateral tilt 3-3
3.2.4 Raise and lower the back plate 3-3
3.2.5 Table top flex / reflex positioning 3-4
3.2.6 Moving the head plate up / down 3-5
3.2.7 Sloping / abducting the leg plate 3-5
3.2.8 Table Longitudinal Displacement (OP830) 3-7
3.2.9 Adjusting Kidney Bridge 3-7
3.2.10 X-ray perspective of the table top 3-8
3.3 Accessories 3-9
3.3.1 Clamps 3-9
3.3.2 Anesthesia screen 3-10
3.3.3 Arm rest 3-10
3.3.4 Lateral support（optional） 3-11

仅用于2017-ZHBJ-2056项目招投标使用

3.3.5 Body strap（optional）.....3-12
3.3.6 Knee crutch（optional）.....3-12

4 Installation and connection.....4-1

4.1 Installation.....4-1
4.2 Connection.....4-1
4.2.1 Connecting to Mains/AC Power.....4-2
4.2.2 Connecting to Equipotential Socket.....4-2
4.2.3 Connecting to corded hand control.....4-3

5 Cleaning and Disinfecting.....5-1

6 User Maintenance.....6-1

6.1 Repair Policy.....6-1
6.2 Maintenance Outline and Schedule.....6-1
6.2.1 User maintenance.....6-1
6.2.2 Maintenance schedule.....6-2
6.2.3 Service life.....6-2
6.3 Replacing fuses.....6-2
6.4 Proper use and transport.....6-3
6.5 Maintaining the battery.....6-3

7 Trouble shooting.....7-1

8 Specifications and theory.....8-1

8.1 Physical data.....8-1
8.2 Environmental requirements.....8-1
8.3 Technical definitions.....8-2
8.4 Working theory.....8-3
8.5 Main Specifications.....8-4
8.6 Electromagnetic Compatibility.....8-6
8.6.1 Guidance and manufacture's declaration – electromagnetic emission.....8-7
8.6.2 Recommended separation distances.....8-11

仅限于2017-ZHBJ-2056项目招投标使用
仅限于2017-ZHBJ-2056项目招投标使用
仅限于2017-ZHBJ-2056项目招投标使用

1 Foreword

1.1 What is the OP830/330 Electronic Operating Table?

The OP830/330 Electronic Operating Table can be divided into five movable sections, head plate, back plate, Kidney Bridge, seat plate and leg plate. The OP830/330 has five functional movements which are controlled via an electrical hydraulic system. The OP830/ 330's movements are: table top up and down, table top sloping (Trendelenburg and Reverse- Trendelenburg), table top tilting (lateral movement), flex (convex) and reflex(concave) movements, and move or lock (inhibit rolling movement of) the Electronic Operating Table. Changes in the positions of the head plate and leg plate are made by activating the corresponding gas strut, while the kidney bridge is adjusted by the form of mechanical transmission. Moreover, the OP830 electric operating table has the function of longitudinal displacement via electro-hydraulic control.

⚠ **WARNING: The user of the OP830/330 must be a medical professional and must be trained.**

⚠ **WARNING: OP830/330 Electronic Operating Table is not suitable for use in a magnetic resonance imaging (MRI) environment.**

⚠ **WARNING: The OP830/330 is not intended for use in areas with risk of explosion. Do not operate the device in the presence of flammable anesthetics or injury or equipment damage could result.**

⚠ **WARNING: To avoid the risk of electric shock, this equipment must only be connected to supply mains with protective earth.**

1.1.1 Intended Use

OP830/330 Electronic Operating Table is used to support patients during the surgeries in the medical institution. It is applicable for thoracic surgery, abdominal surgery, neurosurgery, ENT surgery, gynecological & obstetric surgery and urological surgery, which serves as multifunctional surgery equipment.

1.1.2 Contraindication

There are no known contraindications for this product.

仅限于2017-ZHBJ-2056项目招投标使用

1.1.3 Composition of this equipment

The electronic operating table consists of head plate, back plate, kidney bridge, seat plate, leg plate, column, table basement (including rechargeable batteries), corded hand control, anesthesia screen and arm rest attachements. In addition, The specific accessories such as lateral support, knee crutch and body strap are also optional.

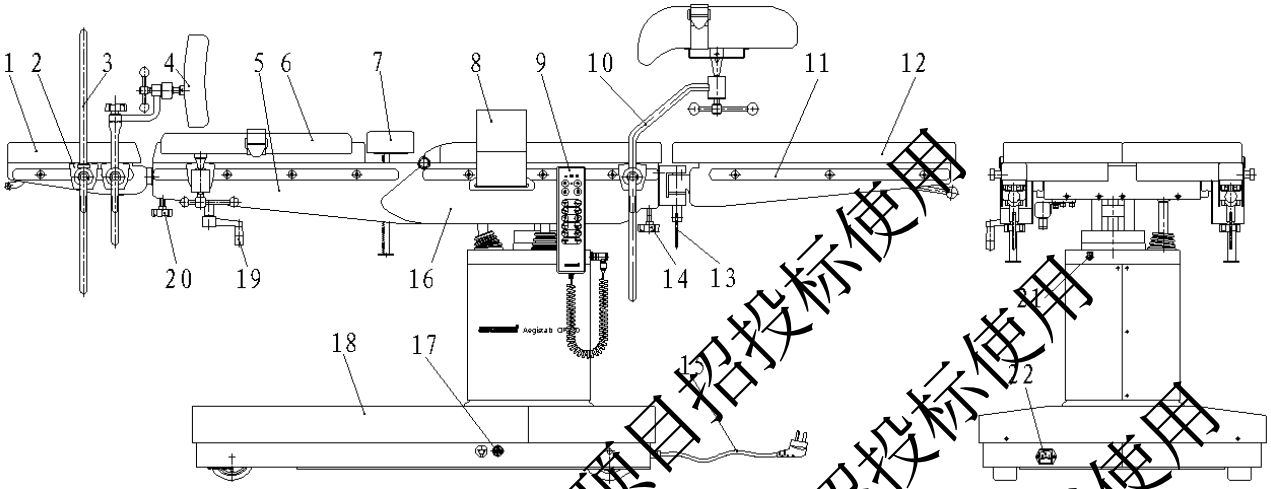

Fig.1-1 Composition of OP830 and OP330 Electronic Operating Table (with optional accessories)

1	head plate	2	clamp	3	anesthesia screen
4	lateral support	5	back plate	6	arm rest
7	kidney bridge	8	body strap	9	corded hand control
10	knee crutch	11	leg plate	12	cushion
13	leg plate abduction locking handle	14	locking knob for leg plate socket	15	AC power cable
16	seat plate	17	equipotential socket	18	table basement
19	the kidney bridge adjustment handle	20	locking knob for head plate socket	21	connection for corded hand control
22	socket for AC mains				

仅限于2017-ZHBJ-2056项目招投标使用
仅限于2017-ZHBJ-2056项目招投标使用
仅限于2017-ZHBJ-2056项目招投标使用

1.2 Symbols in this operating instructions and on the equipment

⚠ **WARNING and** ⚠ **CAUTION indicate possible dangers in case of violation of the stipulations in this manual. Refer to these operating instructions regularly and follow them closely.**

⚠ **WARNING: indicates potential hazards to operators or patients.**

⚠ **CAUTION: indicates potential damage to equipment.**

Instead of illustrations, other symbols may also be utilized. Not all of them may necessarily appear in the equipment and manual. The symbols include:

~	Alternating current		Warning & caution，refer to the manual with the equipment
⎓	Direct Current		Warning & Caution，refer to the manual with the equipment as well as standard IEC60601-1
	Protective ground		Manufacturing address
− +	Storage battery		Production date
	Equipotential socket	SN	Serial number
REF	Catalog Number		Disposal of Waste
	TYPE B APPLIED PART AS DEFINED IN THE IEC 60601-1		

仅限于2017-ZHBJ-2056项目招投标使用

仅限于2017-ZHBJ-2056项目招投标使用
仅限于2017-ZHBJ-2056项目招投标使用
仅限于2017-ZHBJ-2056项目招投标使用

2 Introduction to the Electronic Operating Table

2.1 Table movement control units

Electronic operating tables control the position change of the operating table by the corded hand control.

The corded hand control (Fig. 1-1, 9) is used to control and adjust table movement and is very simple to operate. Integrated microcontrollers in the Electronic Operating Table process all the input instructions from the control units. Symbols representing different control instructions are used on the corded hand control, together with a display for the battery status, as shown in Fig. 2-1.

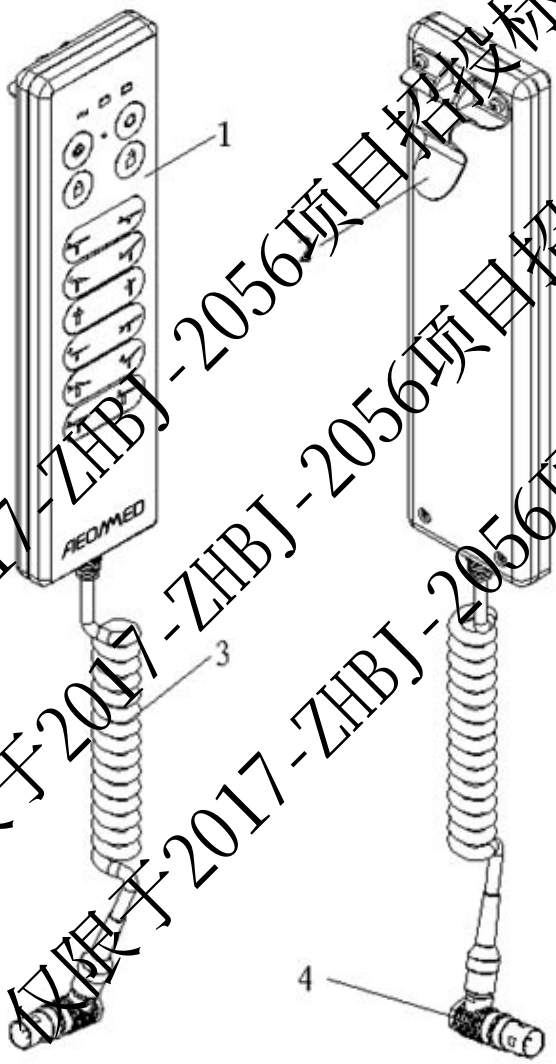

仅限于2017-ZHBJ-2056项目招投标使用
仅限于2017-ZHBJ-2056项目招投标使用
仅限于2017-ZHBJ-2056项目招投标使用

1 Panel of corded hand control 2 Hook 3 Cable 4 Interface Plug

Fig.2-1 Corded hand control

1、Indicators

●	"On, Off" status Indicator (green) for hand control.	When this indicator is "on", it means all function keys on the corded hand control are operational. Execute the desired control function by directly pressing on the appropriate key. When this indicator is "off", it means all function keys on the corded hand control are not operational.
~	AC Mains indicator (green)	When the Electronic Operating Table is connected to mains (AC POWER), this indicator is lit
+ −	Internal battery status Fully-charged indicator (green)	When the internal battery is charging, the battery status indicator will blink until the battery is fully charged. When the battery is fully charged, this indicator will stay fully light.
+ −	Internal battery status Low-charge indicator (red)	When the battery voltage is reduced to 21V±0.5V，this battery indicator will blink, which means that battery status is "low". The battery should be charged as soon as possible. When the battery voltage is reduced to 20V±0.5V or below, this indicator will stay fully lit, which means that the battery now contains insufficient power for surgical use. The battery must be charged fully before surgical use.

2、Function keys

Function keys include:

⊙	"Switch ON" key for all function keys	Press this key, then the function key "ON/OFF" status indicator will light. Only when this indicator is lit, will all the other function keys be operational.
○	"Switch OFF" key for all function keys	Press this key, then the function key "ON/OFF" status indicator will turn off and all the other function keys will be non-operational. After executing a function, press this key to make all function keys non-operational to prevent unintentional movement. The corded hand control will switch off automatically approximately one minute after the last actuation of any key to prevent unintentional actuation even if the "Switch OFF" key has not been pressed.
🔒	Table base lock key	Hold this key, the table base will lock and will not roll.
🔓	Table base unlock key	Hold this key, the lock of the table base will be released, and the table can be rolled again.

仅限于2017-ZHBJ-2056项目招投标使用

	Table top up key	Press and hold this key to raise the complete table top to the desired position.
	Table top down key	Press and hold this key to lower the complete table top to the desired position
	Reverse-Trendelenburg key	Press and hold this key and the table top will move to the Reverse-Trendelenburg position (head up/feet down), release when desired position is reached. During this movement, the patient must be properly secured or supported to prevent the patient from slipping off the table.
	Trendelenburg key	Hold this key and the table top will be move to the Trendelenburg position (head down/feet up), release when desired position is reached. During this movement, the patient must be properly secured or supported to prevent the patient from slipping off the table.
	Right tilting key	Hold this key and the table top will tilt to the right. Release when the desired position is reached. During this movement, the patient must be properly secured or supported to prevent the patient from slipping off the table.
	Left tilting key	Hold this key and the table top will tilt to the left. Release when the desired position is reached. During this movement, the patient must be properly secured or supported to prevent the patient from slipping off the table.
	Back plate upward key	Hold this key and the back plate will be raised upward. Release when the desired position is reached.
	Back plate downward key	Hold this key and the back plate will be lowered downward. Release when the desired position is reached.
	Flex movement key	Hold this key and the center of the table top will protrude and elevate the body of patient (Convex position). Release when the desired position is reached.
	Reflex movement key	Hold this key and the center of the table top will sink and reposition the body of patient (Concave position). Release when the desired position is reached.
	Forward displacement key	Hold this key and the table will do the forward longitudinal displacement. Release when the desired position is reached.
	Backward displacement key	Hold this key and the table will do the backward longitudinal displacement. Release when the desired position is reached.

仅用于2017-ZHBJ-2056项目招投标使用

2.2 Locking knobs

The head plate (Fig. 1-1, 1) of the Electronic Operating Table and the leg plates (Fig.1-1, 11) of the table are detachable and exchangeable. The locking knobs (Fig. 1-1, 14) for the alignment-pins of the leg plates and the locking knobs (Fig. 1-1, 20) for the alignment-pins of the head plate are used to fix the leg plates and head plate after their alignment pins have been inserted into the corresponding sockets.

⚠ **WARNING: The locking knobs must be locked down every time when the head plate or leg plates have been installed to prevent the head plate or leg plates from moving out of position and causing a hazard.**

2.3 Handles

2.3.1 Kidney bridge adjustment handle

This Electronic Operating Table is equipped with a mechanism for raising and lowering the kidney bridge (Fig. 1-1, 7) to provide suitable patient positioning for kidney surgery. By turning the kidney bridge adjustment handle (Fig.1-1, 19), the desired height of the kidney bridge can be achieved.

2.3.2 Leg plate abduction locking handle

The leg plate of this Electronic Operating Table is composed of divided leg sections, which can be abducted horizontally and locked by use of the locking handles (Fig. 1-1, 13)

⚠ **WARNING: Every time after separating the leg plates, the leg plate abduction locking handle (Fig.1-1, 13) must be turned tightly to fix the position of the plates. This must be done to prevent injuries that could arise from unintended movement of the leg plates during movement of the table top.**

2.4 Sockets

2.4.1 Sockets for corded hand control

Before using the corded hand control, insert its plug (Fig.2-1, 4) into the socket (Fig. 1-1, 21) for the corded hand control on the table. When communication has been established the corded hand control is ready for use.

2.4.2 Sockets for mains / AC power

When charging the internal battery of the Electronic Operating Table, insert one end of the AC power cable (Fig.1-1, 15) into the socket for mains/AC Power (Fig. 1-1, 22) on the Electronic Operating Table base.(Fig. 1-1, 18) Connect the other end to a source of mains/AC power. The mains indicators on the corded hand control will light. The table can be used while the cord is plugged in.

2.4.3 Equipotential sockets

The equipotential sockets (Fig. 1-1, 17) establish a pathway with no electric potential difference to ensure the overall electrical safety of medical devices between the operating table and the peripherals. This socket is located in the side which has equipotential sign. Please use the equipotential connecting cable of special plug when connection.

仅限于2017-ZHBJ-2056项目招投标使用

2.5 Cushion

The core of the cushion (Fig. 1-1, 12) is made of polyurethane integral foam of high density and is strong enough to adequately support the weight of patient. The top layer of foam is made of memory foam which conforms to the patient's contours and provided even support to prevent pressure points.

2.6 Accessories

2.6.1 Clamps

Clamps (Fig.1-1, 2) are used to fix certain accessories.

2.6.2 Anesthesia screen

The Anesthesia screen (Fig. 1-1, 3) is used to suspend a cloth curtain (barrier) during surgery to form the anesthesia work area apart from the sterile field.

2.6.3 Arm rest

The arm rest (Fig.1-1, 6) is used to hold the patient's arm during surgery.

2.6.4 Lateral support (optional)

The lateral support (Fig.1-1, 4) is used to support the body of patient during surgery to ensure safe operation.

2.6.5 Body strap（optional）

The body strap (Fig.1-1, 8) is used to secure the patient during surgery to ensure safe operation.

2.6.6 Knee crutch（optional）

The knee crutch (Fig.1-1, 10) is used to hold the patient's leg during surgery.

⚠ **CAUTION: Only the cushion and accessories from Aeonmed are recommended for use with the Electronic Operating Table.**

仅限于2017-ZHBJ-2056项目招投标使用
仅限于2017-ZHBJ-2056项目招投标使用
仅限于2017-ZHBJ-2056项目招投标使用

仅限于2017-ZHBJ-2056项目招投标使用
仅限于2017-ZHBJ-2056项目招投标使用
仅限于2017-ZHBJ-2056项目招投标使用

3 Operation guide

⚠ **WARNING:**

- **In the case of an uneven floor with a slope that is larger than five degrees, do not use this Electronic Operating Table. Otherwise, serious hazards may appear.**
- **When using the Electronic Operating Table and changing the table position, the patient should be supported and fixed with the lateral supports or the body strap to prevent the patient from injury.**
- **When using the Electronic Operating Table, attention must be paid to the patient's body position to avoid possible injury.**
- **When using the Electronic Operating Table, always be sure that its head plate, leg plate and inserted accessories are securely locked in order to prevent them from moving and causing hazards.**
- **This Electronic Operating Table is designed to accommodate a maximum patient weight of 135 kg.**

⚠ **CAUTION:**

- **When using the Electronic Operating Table, attempt to avoid collisions between the Electronic Operating Table and any surrounding items. Collisions like this could lead to unintended table movement and could damage the table. Therefore, when positioning the Electronic Operating Table, it is better to use single control steps instead of complex actuations.**

3.1 Preparation for operation

Step one: Check if the status of the internal battery is sufficient

1. If the corded hand control is to use, the plug of the corded hand control should be inserted into the socket for control unit on the table base. Push the function key "ON" on the corded hand control panel to check the status of the internal battery charge status indicators.
   (a) If the internal battery status indicator is lit green, then this means that the battery is fully charged.
   (b) If the internal battery status indicator is blinking red, this means that the battery charge is low and the Electronic Operating Table can be used for a short time only before recharging the battery.
   (c) If the internal battery status indicator is lit red, this means that there is insufficient battery power available. The battery must be charged before using the Electronic Operating Table. The table may be operated while the battery charging is in progress.
2. If the battery status shows that there is insufficient power, then the battery must be charged. Plug one end of the AC power cable into the mains socket on the table base and connect the other end of the AC power cable to the mains/AC Power source. At this time, mains indicators on the corded hand control will light. During battery charging, the battery status indicator will blink green until the battery is fully charged. When the battery is fully charged the indicator will stop blinking and become continuously lit green.

Step two: Check the head plate, leg plate, and other accessories to assure that their alignment pins and the related locking knobs and levers are locked tightly together.

Step three: Hold the function key on the corded hand control until the indicator lights up. Then press the table base lock key on the corded hand control panel to assure that the base is locked and unmovable.

Step Four: To avoid any unexpected risk, the operation table must be adjusted to its lowest position

仅限于2017-ZHBJ-2056项目招投标使用

with the table top in level, before operation

3.2 Adjustment of table top

Some of the table top functions are controlled via an electrical hydraulic system such as: table top height adjustment; table top Trendelenburg; lateral movements; seat section up and down; table longitudinal displacement (OP830) and the lock and release of basement. Therefore, by holding the function keys on the corded hand control panel, the desired position can be achieved, while adjustment of the head plate, leg plate and Kidney Bridge are manually controlled via a mechanical system.

3.2.1 Table top up / down

Hold the function key “ON” on the corded hand control panel, until the function “ON/OFF” indicator lights. To move the table top up, hold the table top up key and the table top will move upward. When the table top reaches the required position, release the key to stop movement. Conversely, to move the table top down, hold the table top down key. When the table top reaches the required position, release the key to stop movement. The minimum height of table top is 680mm±20mm, with an adjusting distance of ≥270 mm (Fig. 3-1)

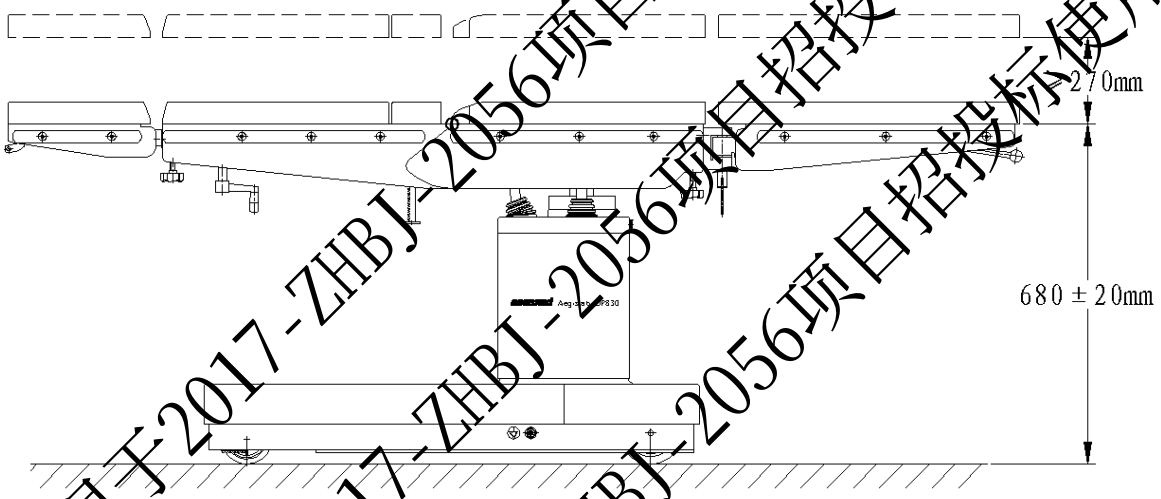

Fig. 3-1 Table top up/down

仅限于2017-ZHBJ-2056项目招投标使用
仅限于2017-ZHBJ-2056项目招投标使用
仅限于2017-ZHBJ-2056项目招投标使用

3.2.2 Table top Trendelenburg/ Reverse-Trendelenburg

Hold the function key “ON” on the corded hand control panel, until the function “ON/OFF” indicator lights. To move the table top to the Trendelenburg position, hold the table top Trendelenburg key, the table top will begin sloping with the head down. Release the key when the desired position is reached. Conversely, to move the table top in the Reverse Trendelenburg position, hold the Reverse-Trendelenburg key and the table top will begin sloping moving the head section upward. Release the key when the desired position is reached. The table top Trendelenburg and Reverse Trendelenburg range of movement is ≥30º each direction (Fig. 3-2). Before creating the slope of the table top, the patient must be supported and secured properly to prevent unintentional injury.

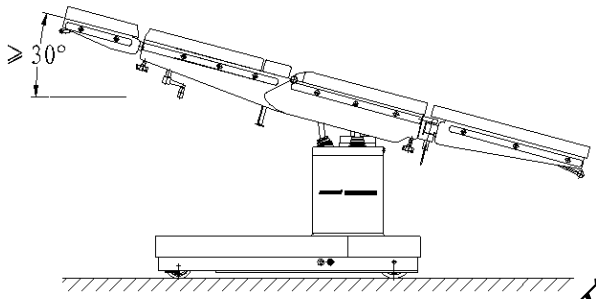

Trendelenburg

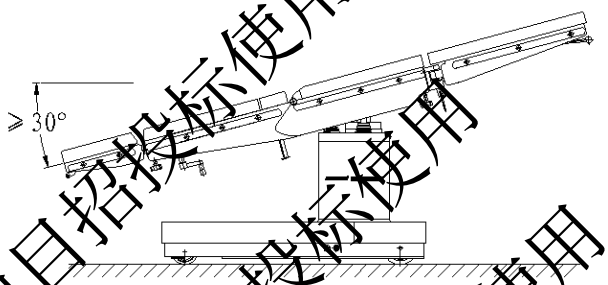

Reverse-Trendelenburg

Fig. 3-2 Trendelenburg / Reverse-Trendelenburg

3.2.3 Table top lateral tilt

Hold the function key “ON” on the corded hand control panel until the function “ON/OFF” indicator lights. To tilt the table top to the left, hold the table top left tilting key. The table top will tilt to the left. Release the key when the desired position is reached. Conversely to tilt the table top to the right, hold the table top right tilting key. The table top will tilt to the right. Release the key when the desired position is reached. The right tilting and left tilting angles for the table top are ≥20º (Fig. 3-3). Before tilting the table top, the patient must be supported and secured properly to prevent unintentional injury.

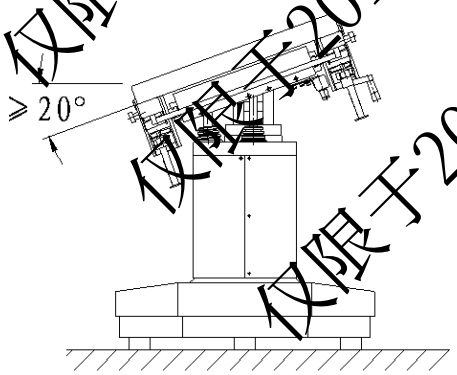

Left tilt

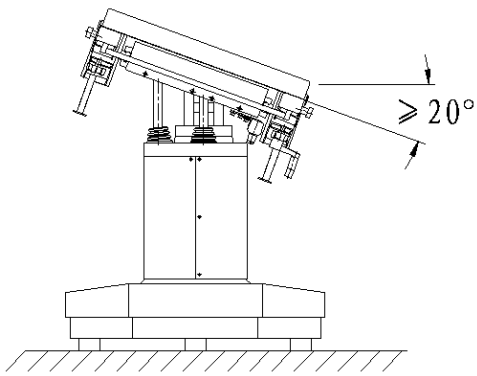

Right tilt

Fig. 3-3 Table top tilt

仅限于2017-ZHBJ-2056项目招投标使用
仅限于2017-ZHBJ-2056项目招投标使用
仅限于2017-ZHBJ-2056项目招投标使用

3.2.4 Raise and lower the back plate

Hold the function key “ON” on the corded hand control panel, until the function “ON/OFF” indicator lights. To move the back plate upward, hold the back plate upward key. The back plate will be raised up. Release the key when the desired position is reached. Conversely, to move the back plate downward, hold the back plate downward key. The back plate will be lowered down. The back plate up angle is ≥75º and the back plate down angle is ≥30º for OP330 and ≥25º for OP830 (Fig.3-4).

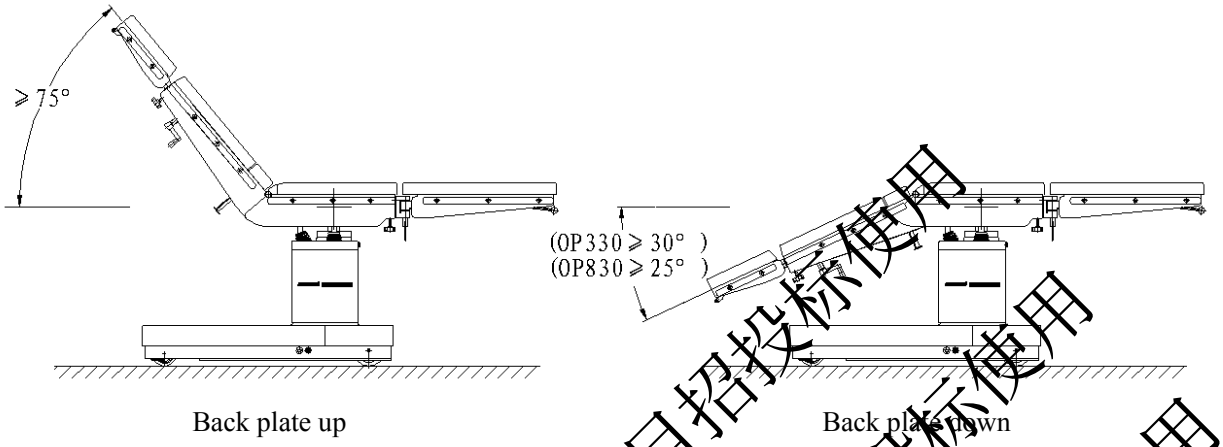

Fig. 3-4 Raise / lower the back plate

3.2.5 Table top flex / reflex positioning

Hold the key “ON” on the corded hand control panel and the function “ON/OFF” indicator will light. Hold the flex positioning key and the table top will protrude upward from the middle. Release the key when the desired position is reached. Conversely, if the reflex positioning key is held, the middle of table top will sink down (Fig. 3-5). Release the key when the desired position is reached.

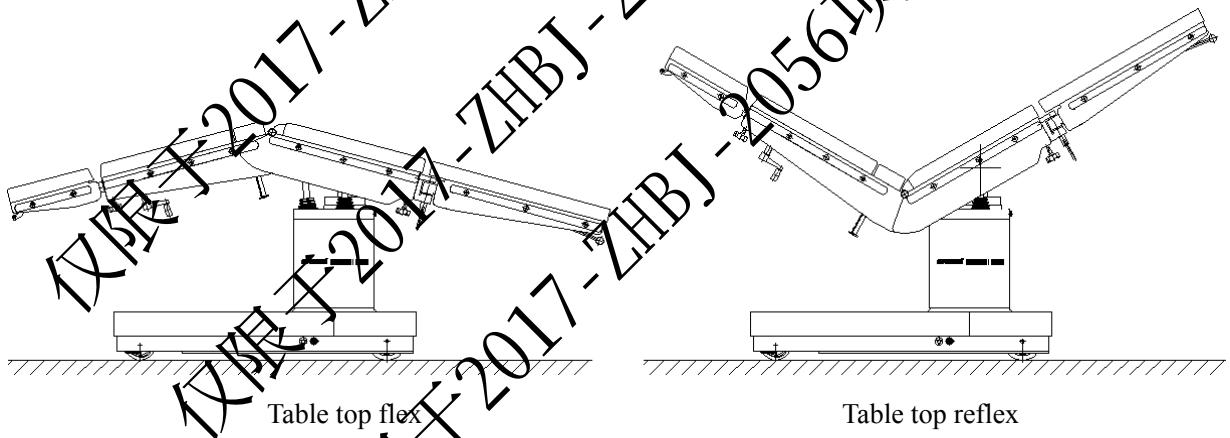

Fig. 3-5 Table top flex / reflex positioning

仅限于2017-ZHBJ-2056项目招投标使用
仅限于2017-ZHBJ-2056项目招投标使用
仅限于2017-ZHBJ-2056项目招投标使用

3.2.6 Moving the head plate up / down

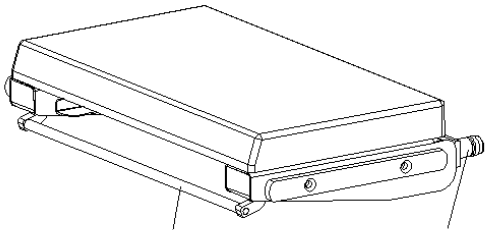

Fig. 3-6 Head plate

The adjustment of the head plate up and down is controlled by a gas strut, and is adjustable within an adjustment range. The head plate is detachable. To install the head plate: 1) Put the two guide pins (Fig. 3-6, 2) of the head plate into the two jacks of the back plate. 2) Turn tight the locking knob for the guide pins. To change the angle of head plate, push upward on the release bracket (Fig. 3-6, 3) for the head plate. The head plate can be sloped upward and downward. Let go of the release bracket and then the head plate will stay at its current position. The Head plate up angle is ≥30º. The Head plate down angle is ≥45º (Fig 3-7).

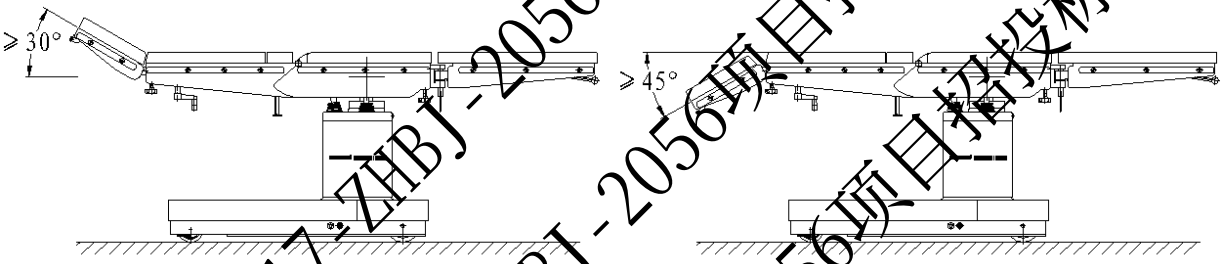

Head plate up　　Head plate down

Fig. 3-7　Head plate up / down

3.2.7 Sloping / abducting the leg plate

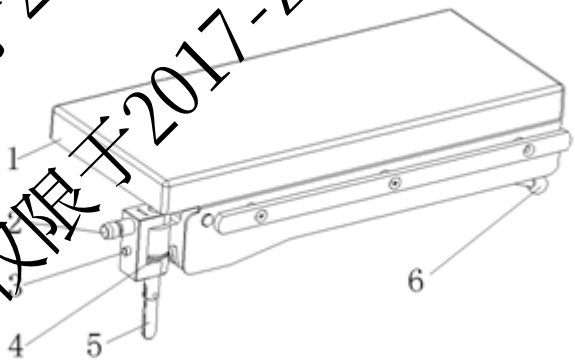

1 leg plate cushion	2 guide pin	3 indexing pin
4 crown gear	5 leg plate abduction locking handle	6 release lever

Fig. 3-8　Leg plate

仅限于2017-ZHBJ-2056项目招投标使用

The leg plate consists of two symmetrical plates which form the divided leg plate. The downward adjustment of the leg plate is controlled via a gas strut. The leg plate is adjustable within the adjustment range and can be abducted by actuating mechanical parts. Each leg plate is also detachable.

To insert the leg plate: 1) Put the guide pin of the leg plate and its indexing pin (Fig. 3-8, 2 & 3) into the corresponding sockets on the seat plate; 2) Secure the locking knob for the guide pins of the leg plate. To adjust the downward slope of the leg plate, push up on the release lever (Fig. 3-8, 6), then move down the leg plate to the required position and release the lever. The leg plate will then stay at the current position. To reposition the leg plate, push the release lever. Because of the effect of gas spring, the leg plate will move upward and reset automatically. When carrying out this operation, be careful to use one hand to push the release lever while pressing on the leg plate with the other hand to prevent sudden movements of the leg plate. The upward and downward sloping angle of the leg plate is separately ≥5º and ≥90º (Fig. 3-9).

To abduct the leg plate: 1) Loosen the abduction locking handle of the leg plate (Fig. 3-8, 5). This will allow abduction of the leg plate to the required angle. 2) Fasten the abduction locking handle and the leg plate will stay at the engaged position. The abduction range is ≥180º (Fig. 3-9).

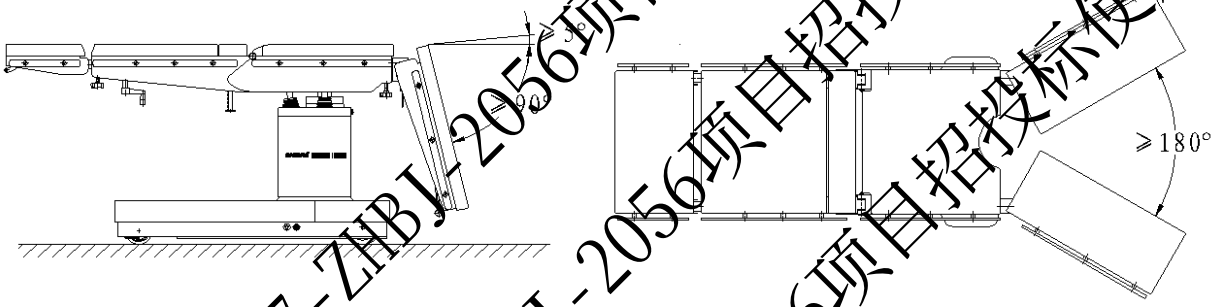

Leg plate down　　Leg plate abduction

Fig.3-9 Leg plate sloping down / abduction

仅限于2017-ZHBJ-2056项目招投标使用
仅限于2017-ZHBJ-2056项目招投标使用
仅限于2017-ZHBJ-2056项目招投标使用

3.2.8 Table Longitudinal Displacement (OP830)

⚠ **WARNING:** **Before the operation of table longitudinal displacement, ensure the operating table top is in a horizontal position to avoid the damage to both the patient and table.**

⚠ **CAUTION:** **If the longitudinal displacement won't be used in the surgery, please move the operating table to the backward limitted position.**

Before the operation of the table longitudinal displacement, make the entire table in a horizontal position. Hold the Switch function key "ON" on the corded hand control panel and the function "ON/OFF" indicator will light. Hold the forward/backward longitudinal displacement key and the table will give the corresponding action. Release the key when the desired position is reached. The translation range is 300±10mm（Fig. 3-10）。

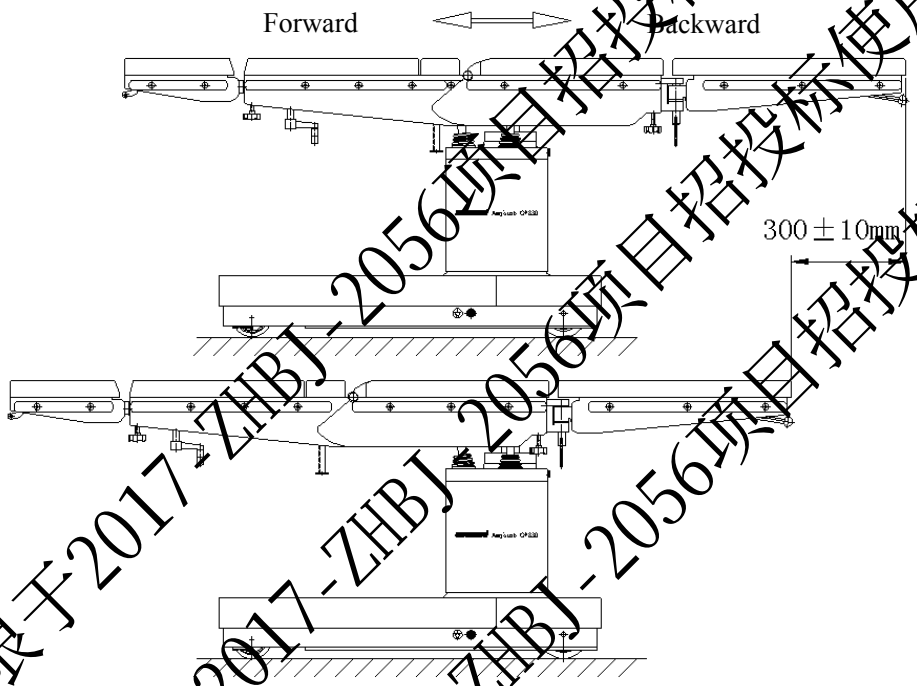

Fig.3-10 table longitudinal displacement (OP830)

3.2.9 Adjusting Kidney Bridge

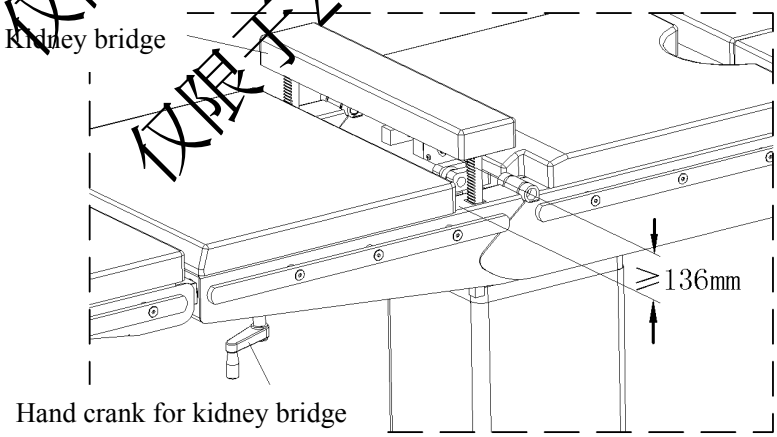

Fig 3-11 Kidney Bridge

仅限于2017-ZHBJ-2056项目招投标使用

The adjustment of the height of the kidney bridge is accomplished by turning a hand crank. Turn the hand crank counter-clockwise and the kidney bridge will be raised up. Turn the hand crank clockwise and the kidney bridge will be lowered down. The adjustment range of the kidney bridge is ≥136 mm (Fig 3-11).

3.2.10 X-ray perspective of the table top

All the plates of the table top are made with radiolucent materials, enabling the operator of a C-arm X-ray machine to easily to find a location for high quality imaging. To understand the areas of best X-ray transmission through the table top refer to Fig. 3-12. In the figures, the shadowed sections represent X-ray blocking areas.

Units: mm

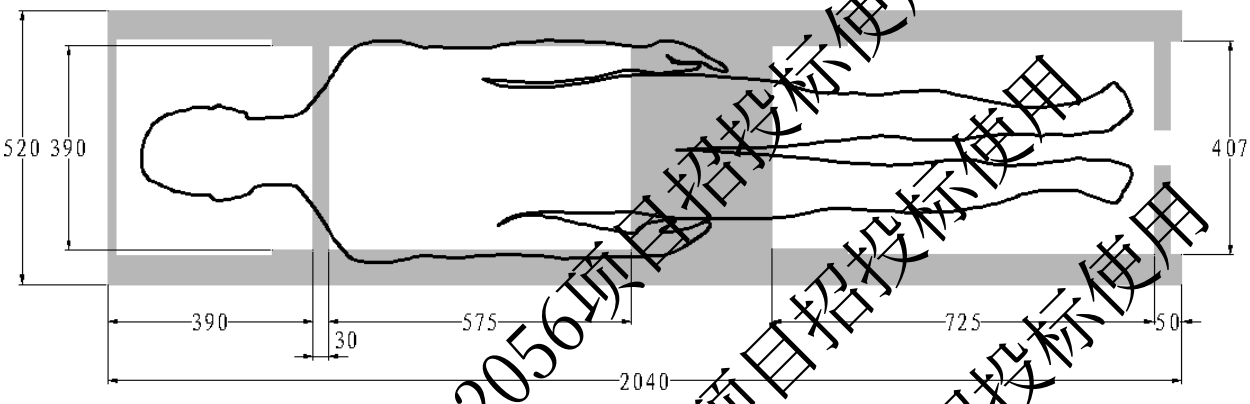

The top's perspective range (OP330)

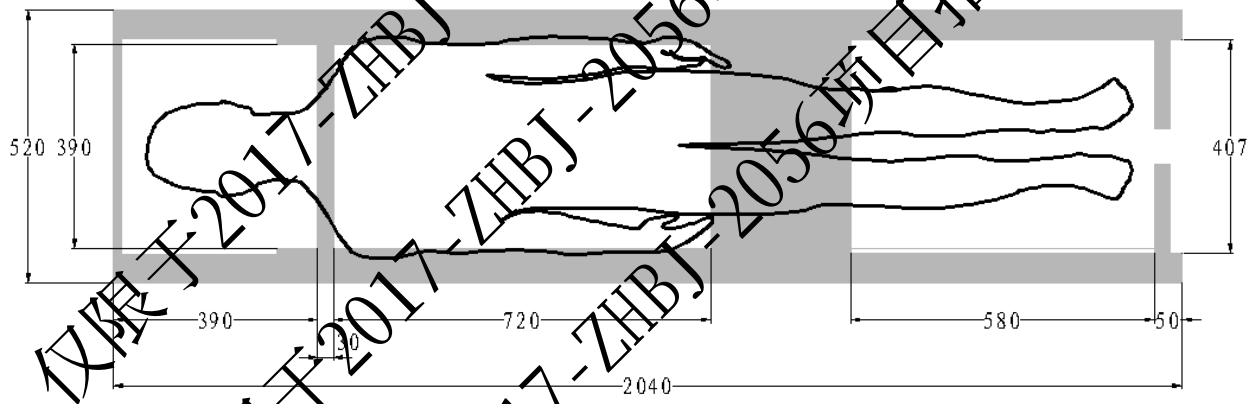

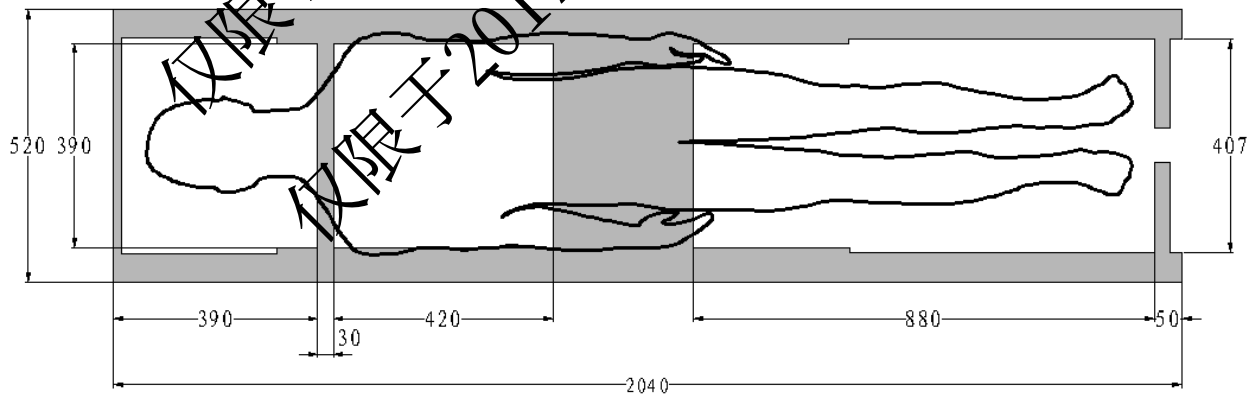

Limit position in the longitudinal displacement (OP830)

Fig 3-12 Illustration of X-ray perspective of the table top

仅限于2017-ZHBJ-2056项目招投标使用

⚠ **CAUTION:**

- **The unmarked portions (no diagonal lines) of the table top in the figure are only suitable for imaging from the front position with the C-arm. In the case of imaging from the side position, it is the up to the operator's discretion to determine procedures that will yield the best results depending on the model of C-arm X-ray machine used.**
- **When using the C-arm for imaging, attention must be given to the X-ray tube support position to avoid collision with any accessories suspended from the rails of the Electronic Operating Table as damage could result.**

3.3 Accessories

3.3.1 Clamps

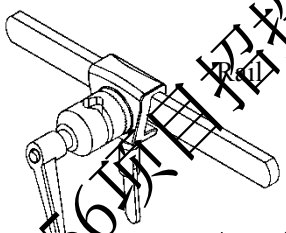

1 Insertion Rod Fastening Handle 2 Insertion Rod Block 3 Clamp Seat 4 Fix-to-rail Crank

Fig.3-13 Clamp

Clamps can be used to fix various kinds of accessories that contain an insertion rod to the Electronic Operating Table side rails.

To attach an accessory using a Clamp: 1) Hang or slide the clamp seat (Fig. 3-13, 3) onto the side rail of Electronic Operating Table; 2) Turn and secure the fix-to-rail crank (Fig. 3-13, 4) so that the clamp is fixed tightly on the rail; 3) Put the inserting rod of the accessory to be installed into securing block (Fig. 3-13, 2); 4) Fasten the insertion rod using the Fastening Handle (Fig. 3-13, 1) until the geometric gear is fully matched and becomes tight, so that the insertion rod of the accessory is securely locked in place.

To shift the clamp along the rail, loosen the fix-to-rail crank and move the clamp to the desired position, then re-fasten the fix-to-rail crank.

To change the accessory, loosen the Insertion Rod Fastening Handle and remove the current accessory, then insert the new accessory and fasten the Insertion Rod Fastening Handle.

To rotate the insertion rod of the current accessory, loosen the Insertion Rod Fastening Handle until the geometric gear allows rotation of the insertion rod to the desired position. Fasten the Insertion Rod Fastening Handle until the Insertion Rod is held firmly in the desired position.

仅用于2017-ZHBJ-2056项目招投标使用

3.3.2 Anesthesia screen

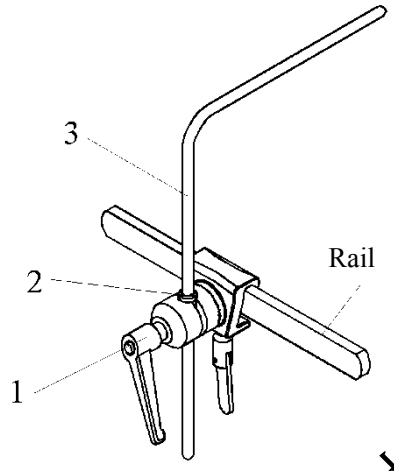

1 Clamp 2 Retaining ring 3 Anesthesia screen

Fig 3-14 Anesthesia screen

The anesthesia screen is used to hold a sterile barrier which forms a separate area for the anesthesia clinician. It should be used with a clamp.

To fix the clamp (Fig. 3-14, 1) onto the rail of Electronic Operating Table: 1) insert one end of the anesthesia screen (Fig. 3-14,3) into the hole of clamp; 2) follow the method above for securing the Insertion Rod to the Clamp to fix the anesthesia screen in place.

It is possible to adjust the height, distance, and level of the anesthesia screen by adjusting the inserting rod, to set the anesthesia screen to the desired position.

3.3.3 Arm rest

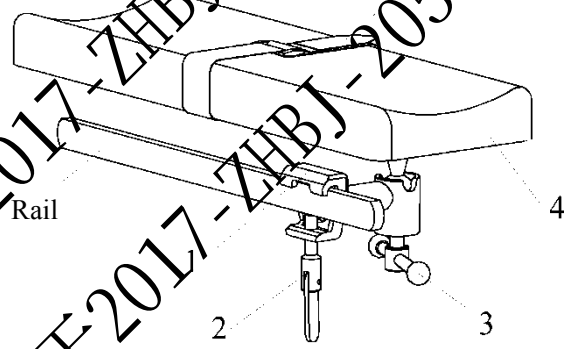

1 Clamp seat 2 Fix-to-rail securing crank 3 Hand lever 4 Arm board 5 Arm strap

Fig.3-15 Arm rest

The arm rest is used to position the arm of the patient during surgery.

To position the Arm rest on the Electronic Operating Table: 1) Hang or Slide the clamp seat (Fig.3-15, 1) of the arm rest onto the side rail of the Electronic Operating Table; 2) Rotate and fasten the fix-to-rail securing crank (Fig.3-15, 2); 3) After the clamp is fixed in place, if there is need to change the position of arm board (Fig.3-15, 4), loosen the hand lever (Fig. 3-15, 3) under the arm board and turn the arm board freely in any direction within the adjustable range; 4) Use the hand lever (Fig. 3-15, 3) to lock the arm board in the desired position.

仅限于2017-ZHBJ-2056项目招投标使用

Use the arm strap (Fig. 3-15, 5) to fasten the patient's arm to the Arm rest.

⚠ **WARNING: When using the arm rest, do not apply extreme pressure or place heavy articles on the arm board, to prevent damage from occurring.**

3.3.4 Lateral support（optional）

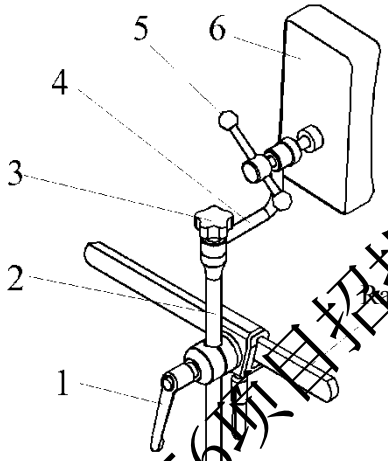

1 Clamp 2 Insertion rod 3 Securing knob

4 Joint rod 5 Hand lever 6 Support padding

Fig. 3-16 Lateral support

The lateral support is used to support the body of the patient during surgery. It should be used together with a clamp.

To position the Lateral support of the Electronic Operating Table: 1) Fix the clamp (Fig.3-16,1) onto the rail of the table; 2) Put the insertion rod (Fig.3-16,2)of the lateral support into the hole of the clamp; 3) Fasten the rod by securing the insertion rod into the clamp.

If the position of the support padding (Fig. 3-16, 6) must change, loosen the hand lever (Fig.3-16, 5). Then the padding can be turned in all directions within its adjustable range. When the padding reaches the desired position, lock the support padding in place by securing the hand lever (Fig.3-16, 5).

If the lateral support must be turned around, loosen the securing knob (Fig.3-16, 3) and pull up on the lateral support to allow movement of the joint rod (Fig.3-16, 4). The lateral support can be turned around 360º in the horizontal plane. When the lateral support reaches the desired position, fasten the securing knob to make the gears hold tightly, which will fix the support in that position.

In addition, by adjusting the insertion rod in the clamp, the height, distance and level position of the complete lateral support can be adjusted to the required position.

仅限于2017-ZHBJ-2056项目招投标使用

3.3.5 Body strap（optional）

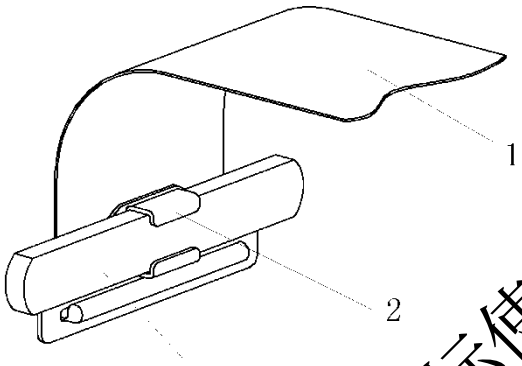

1 Body strap 2 Mounting piece

Fig.3-17 Body strap

The body strap is used to secure the patient safely during surgery.

First put the two mounting pieces (Fig. 3-17, 2) onto the rails of the Electronic Operating Table at each side. Then insert the soft end of the two straps (Fig. 3-17, 1) into the long grooves of the mounting pieces respectively (pay attention to the direction of Velcro contact). Then use the Velcro to hold the straps together as desired.

3.3.6 Knee crutch（optional）

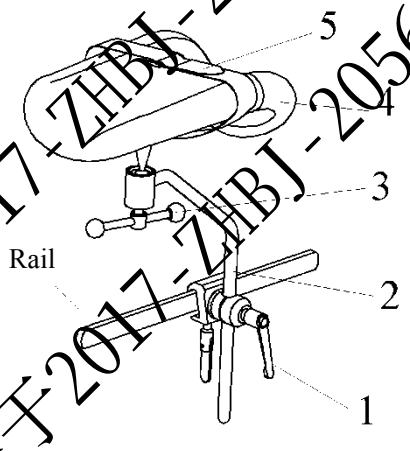

1 Clamp 2 Insertion rod 3 Hand lever 4 Leg Padding 5 Leg strap

Fig.3-18 Knee crutch

The knee crutches are used to support the patient’s legs during obstetric & gynecologic surgery and urological surgery.

The knee crutches must be used together with clamps to mount to the Electronic Operating Table: 1) Mount the clamp（Fig.3-18, 1）onto the rail; 2) Then put the insertion rod (Fig.3-18, 2）of the knee crutch into the hole on the clamp; 3) Secure the insertion rod as shown above.

仅限于2017-ZHBJ-2056项目招投标使用

To adjust the position of the leg padding (Fig.3-18,4)，loosen the hand lever（Fig.3-18,3）underneath the padding，then turn the padding in any direction within the adjustable range. Tighten the hand lever after positioning the knee crutch as desired.

In addition, by adjusting the insertion rod in the clamp, the height, distance and level position of the knee crutch can be changed as desired.

Use the leg strap (Fig.3-18, 5) to secure the patient's leg to the knee crutch.

仅限于2017-ZHBJ-2056项目招投标使用
仅限于2017-ZHBJ-2056项目招投标使用
仅限于2017-ZHBJ-2056项目招投标使用

仅限于2017-ZHBJ-2056项目招投标使用
仅限于2017-ZHBJ-2056项目招投标使用
仅限于2017-ZHBJ-2056项目招投标使用

4 Installation and connection

⚠ **WARNING:** **This Electronic Operating Table is not the devices of AP or APG-style and doesn't have antistatic properties.**

⚠ **CAUTION:**

- **To avoid the electric interference from high-intensity electric field to the operating table, please put the electric surgical wire away from the device.**
- **The Electronic Operating Table should be kept away from heat sources. Equipment such as: Steam sterilizers, Infrared heaters, Radiant heaters, etc. must be at least one meter away from the Electronic Operating Table.**
- **The operating table can be used in conjunction with the high frequency surgical equipment and in this environment, both the operating table and its controller won't cause the safety risks.**
- **If a defibrillator or defibrillator monitor is used near the Electronic Operating Table, then the functions of the Electronic Operating Table may be affected.**
- **The housing of the Electronic Operating Table is electrically grounded. Use care regarding patient and system grounding when using other electronic instruments.**
- **This Electronic Operating Table is splash-proof equipment, type IPX4. Pay attention to moisture prevention. Do not allow any liquid, including water, to enter the machine.**

4.1 Installation

The Electronic Operating Table must be properly placed in the application site, and should not form any hindrance to the medical staff when they carry out therapy or other medical care procedures.

⚠ **WARNING:** **Make sure that the floor at the installation site is not inclined with a slope more than 5 degrees, to avoid any unexpected risk for patient.**

4.2 Connection

⚠ **WARNING:**

- **Beware of the danger of the patient suffocating or cables intertwining when positioning the mains/AC cable and the corded hand control.**
- **A Battery low indication may occur if the internal battery has not been charged for a long time. If this occurs, do not use the Electronic Operating Table except on AC Power. It is recommend to connect the Electronic Operating Table to AC mains power and to charge the internal battery for at least 8 hours. If the battery low indication still exists, then the battery should be replaced (please contact qualified technicians). Aeonmed suggest that the internal battery should be charged after every surgery, to avoid any influence on surgery caused by a low battery condition**

⚠ **CAUTION:** **If the installation and wiring of the external protective conductor are not integral, please use the internal battery as the power source for the Electronic Operating Table.**

仅限于2017-ZHBJ-2056项目培训使用

4.2.1 Connecting to Mains/AC Power

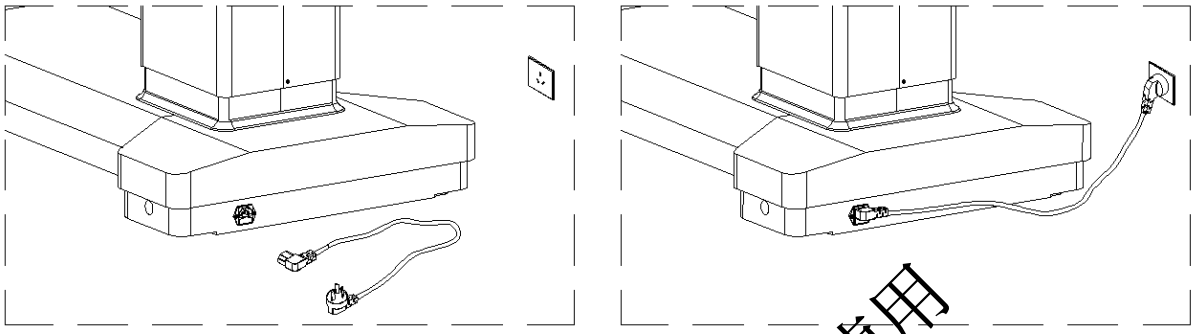

Before connecting　　after connecting

Fig. 4-1 connecting to mains

Plug one end of the power cable to the power socket at the end of table base. Connect the other end of the power cable to the mains/AC power wall connection. Refer to Fig. 4-1.

4.2.2 Connecting to Equipotential Socket

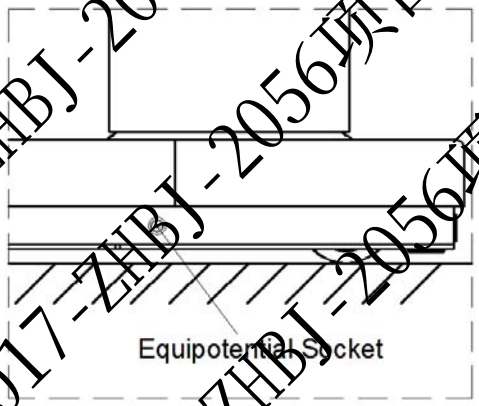

Fig. 4-2 Connecting the Equipotential Socket

The Equipotential Socket, located to the side of the equipotential symbol, permits the inter-linking of chassis ground from the operation table to other devices present in the clinical environment.

⚠ **CAUTION: Use the special Equipotential cable to connect the Equipotential Socket.**

仅限于2017-ZHBJ-2056项目招投标使用
仅限于2017-ZHBJ-2056项目招投标使用
仅限于2017-ZHBJ-2056项目招投标使用

4.2.3 Connecting to corded hand control

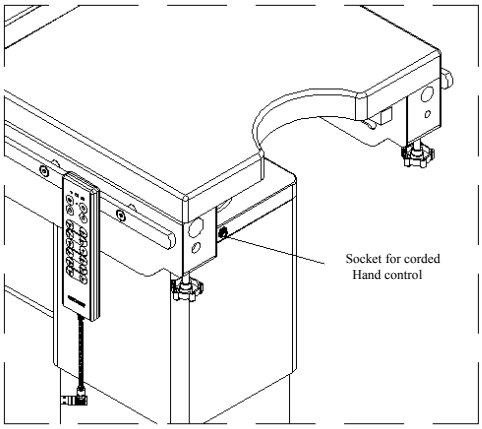

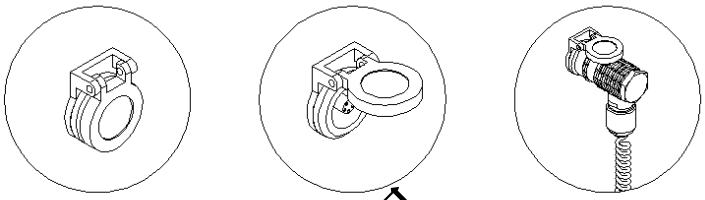

Before connection　　Open slash-proof cover　　After connection

Fig. 4-2 connecting the corded hand control

Open the splash-proof cover for the corded hand control on the column of the Electronic Operating Table, and insert the plug of the corded hand control cable into the mating socket. The socket is located on the side of the column of the table (as shown on Fig. 4-2).

仅限于2017-ZHBJ-2056项目招投标使用
仅限于2017-ZHBJ-2056项目招投标使用
仅限于2017-ZHBJ-2056项目招投标使用

仅限于2017-ZHBJ-2056项目招投标使用
仅限于2017-ZHBJ-2056项目招投标使用
仅限于2017-ZHBJ-2056项目招投标使用

5 Cleaning and Disinfecting

⚠ **WARNING:**

Comply with your hospital's applicable regulations regarding safety and risk management.

- **Refer to the material safety data guidelines of each cleaning agent.**
- **Refer to the operating and maintaining manual of all the disinfecting equipment used.**
- **Wear safety gloves and safety goggles.**

⚠ **CAUTION:** **To prevent damage:**

- **Refer to the data supplied by the manufacturer if there are any questions about the cleaning agent.**
- **Never use any organic, halogenated or petroleum based solvents, anesthetic agents, glass detergents, acetone or other irritant cleaning agents.**
- **Never use any abrasive materials to clean any of the components (i.e. Steel wool, silver polish).**
- **Keep liquids as far from the electrical components as possible.**
- **Prevent liquid from entering the equipment.**
- **The PH value of cleaning solutions used must be between 7.0 and 10.5.**

⚠ **CAUTION:** **Check if there is damage to the components of the Electronic Operating Table. Replace if necessary.**

- **Do not clean the table with a scrubbing brush or any other tools which may cause damage to the outer surface.**
- **Clean and disinfect the cushion of the table top with a solution of 20% alcohol or a solution of 2% glutaraldehyde. Promptly wipe off any stains on the cushion to help prolong its service life.**
- **Cleaning and disinfection is necessary for the Electronic Operating Table either before or after the surgery, use only cleaning agents and disinfectants that are not corrosive.**
- **Clean up disinfectant residuals from the Electronic Operating Table and cushion by using warm sterile water after disinfection.**
- **The complete unit may be disinfected by using ultra-violet lighting disinfection systems.**
- **Aeonmed suggests an examination and check of all the parts of the Electronic Operating Table during every cleaning. Any damaged parts should be replaced.**

仅限于2017-ZHBJ-2056项目招投标使用
仅限于2017-ZHBJ-2056项目招投标使用
仅限于2017-ZHBJ-2056项目招投标使用

仅限于2017-ZHBJ-2056项目招投标使用
仅限于2017-ZHBJ-2056项目招投标使用
仅限于2017-ZHBJ-2056项目招投标使用

6 User Maintenance

⚠ **WARNING: Movable components and detachable parts can cause injury. Use caution when system components and parts are being moved or replaced.**

⚠ **WARNING: As waste or used components and materials (such as battery, oil, or electronic components) may pollute the environment, disposal of them must be in accordance with the relevant policies of your local government.**

6.1 Repair Policy

Do not use malfunctioning equipment. Make all necessary repairs, or have the equipment serviced by an authorized Aeonmed Service Representative. After repair, test the equipment to ensure that it is functioning properly, in accordance with the manufacturer's published specifications.

To ensure full reliability, have all repairs and service done by an authorized Aeonmed Representative. If this is not possible, replacement and maintenance of parts as described in this manual should be performed by a competent, trained individual with experience in Medical Systems repair, and access to appropriate testing and calibration equipment.

⚠ **CAUTION: No repair should ever be undertaken or attempted by anyone without proper qualifications and equipment.**

It is recommended that the damaged parts should be replaced with components manufactured and sold by Aeonmed. After any repair work, test the unit to ensure it complies with the manufacturer's published specifications.

If service support is needed, please contact the nearest Aeonmed Service Center for service assistance. In all cases, other than where Aeonmed's warranty is applicable, repairs will be made at Aeonmed's current list price for the replacement part(s) plus a reasonable labor charge.

6.2 Maintenance Outline and Schedule

The following schedule is a recommended minimum standard based upon normal usage of 500 times per year and environmental conditions. Frequency of maintenance for the equipment should be higher if your actual usage is more than the minimum standard.

6.2.1 User maintenance

Minimum maintenance Interval	Planned maintenance Operations
Every use	Clean the outer surface.
Daily	Charge the battery
Every three month	If the Electronic Operating Table has not been in use for three months, then a full discharging and re-charging of the battery should be carried out.

仅限于2017-ZHBJ-2056项目招标技术使用

When cleaning and installing	Check if any components are broken, and replace or repair them as necessary. Check to ensure no oil leakage
As required	Replace fuses if any are found to have blown.

6.2.2 Maintenance schedule

⚠ **CAUTION: The following maintenance schedule is recommended for equipment and accessories used in normal working conditions.**

The complete unit	The recommended maintenance interval for the Electronic Operating Table is 5 years
Components or parts	A thorough test and replacement of parts should be carried out every 5 years
Cushion or accessories	A thorough test and replacement of parts should be carried out at least every 3 years

6.2.3 Service life

⚠ **CAUTION: The service life of Aeonmed OP830/330 Electronic Operating Table is 10 years. Please replace the Operating Table after 10 years to ensure the safe usage of the product.**

6.3 Replacing fuses

⚠ **WARNING: Disconnect the Electronic Operating Table from mains/AC supply before replacing fuses, otherwise injury may result.**

⚠ **WARNING: Replace fuses with only those of the specified type and current rating, otherwise damage to the equipment could result.**

⚠ **CAUTION: Each fuse is fragile, so replacement should be done carefully. Do not use excessive force.**

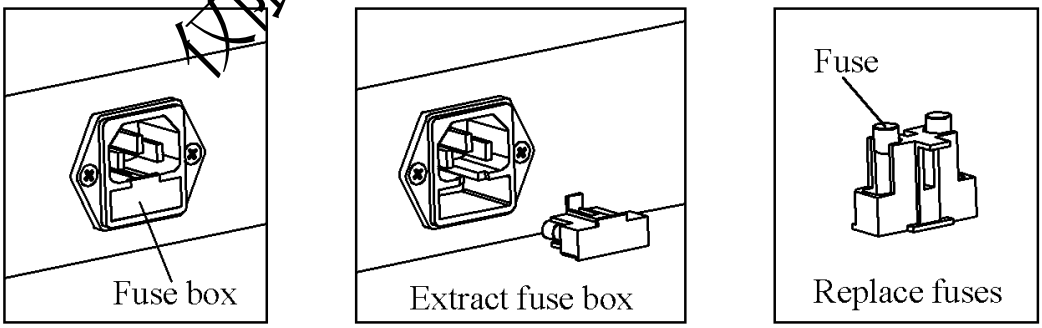

Fig. 6-1, Replace fuses

仅限于2017-ZHBJ-2056项目招投标使用

Steps for replacing the fuses are as follows: (see Fig. 6-1)

1) Place a screw driver into the top groove of the fuse box in the mains socket; pull and extract the fuse box, take out the fuse box;
2) Remove the fuses;
3) Put in new fuses;
4) Reinstall the fuse box;
5) Connect to Electronic Operating Table to the mains/AC supply.

6.4 Proper use and transport

⚠ **WARNING:**

- **When transporting the Electronic Operating Table, do not move it with the head plate or leg plate attached, as this may break the head plate or leg plate.**
- **When transporting the Electronic Operating Table, the table top should be set at the lowest height position to reduce the risk of overturning the Table and causing injury.**
- **When transporting the Electronic Operating Table, the ground level should not be sloped more than 10 degrees to avoid overturning and causing injury.**

When the Electronic Operating Table was packaged for shipment, the base of the Table was locked. After opening the shipping case, the base of the table should be unlocked first and made movable, then the Electronic Operating Table can be transported.

Packaged Electronic Operating Tables can be shipped by any means of highway, air, or railway transportation. During shipment, collision, violent shock and moisture should be avoided.

6.5 Maintaining the battery

- Specifications of battery

DC 12V, 12 Ah, lead-acid battery, two in series.

Typical charge time: 8 hours

- How to use the batteries

Temperature: The maximum temperature of the battery cannot exceed 50℃.

Charge: When connected with mains/AC supply; the system will maintain auto-charging of the battery. It is recommended that charging time should be longer than 8 hours.

Discharge: The internal battery of the Electronic Operating Table will generally last for 60 minutes of working before another charge is needed.

The battery low indicators on the corded hand control panel will signify when the battery is low. Please connect the Electronic Operating Table to the mains/AC supply and charge the battery immediately to avoid “battery fully exhausted” , which will leave the system unable to move.

⚠ **WARNING:** **Do not disassemble the battery device without valid authorization and proper training and equipment. Do not short-circuit between the two connections of the battery which may cause extreme and dangerous electrical current flow.**

仅用于2017-ZHBJ-2056项目招标技术使用

- How to store the battery

If the battery will not be put into use for a long time, it should be fully charged for storage.

The maintenance of charging should be carried out per the User Maintenance section 6.1 with an interval of every 3 months if storage of the battery exceeds 3 months.

The storage environment should avoid dampness and high temperatures.

If improper maintenance damages the battery, the battery should be replaced in time to avoid of the spilling of battery fluids which could rust the apparatus. Contact your local Aeonmed service representatives for replacement of the battery.

- How to replace the battery

Before replacing the battery, be certain that the Electronic Operating Table has been disconnected from the mains/AC power.

⚠ **CAUTION:** **Only an authorized service representative is allowed to replace the battery. Disposal of the waste battery should comply with the local policies regarding environmental safety.**

⚠ **WARNING:** **Use the batteries only supplied by Aeonmed for replacement. Pay close attention to positive and negative polarities of the battery when replacing it, otherwise the equipment could be damaged.**

- Steps for replacing the battery (Fig. 6-2).
  a) Move the table top to its maximum height. Power off the table and disconnect the power cable from the table base.
  b) Pull the rubber ring outside the column housing and use a screw driver to remove all the screws between the inner housing and the base housing.
  c) Use a screw driver to remove all four screws between base housing and the base and take off the rear housing.
  d) Use a screw driver to remove the screws between the battery cover and the basement and take off the battery cover.
  e) Pull up the wires on the two ends of the battery module
  f) Take out the old battery module, replace with a new battery module while giving attention to the polarity of the connections. Reinstall in the reverse of disassembly steps above.
  g) When lowering the table carefully guide the telescoping sleeves to telescope them together properly.

仅限于2017-ZHBJ-2056项目招投标使用
仅限于2017-ZHBJ-2056项目招投标使用
仅限于2017-ZHBJ-2056项目招投标使用

Remove the four connecting screws between base housing and the base.

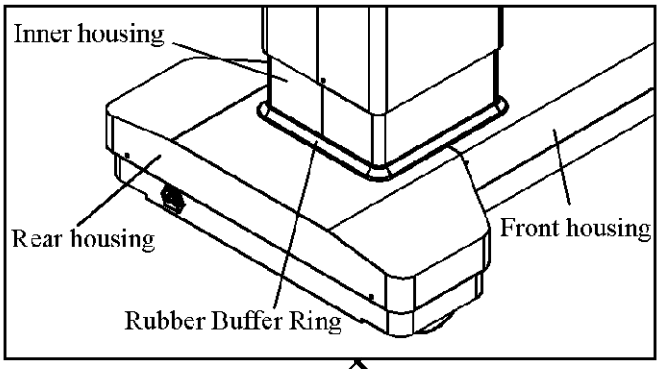

Take off the rear housing and remove the connecting screws between battery cover and the basement.

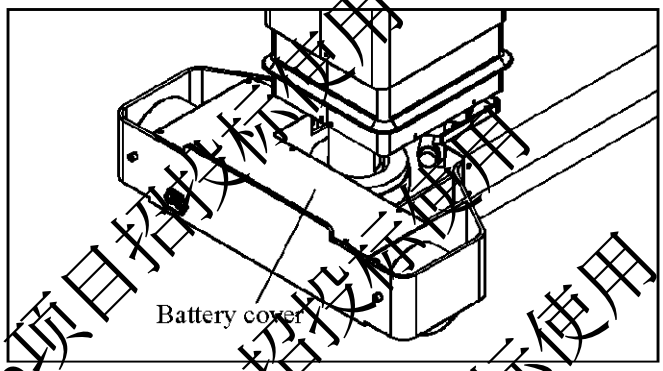

Take off the battery cover and replace with a new battery module.

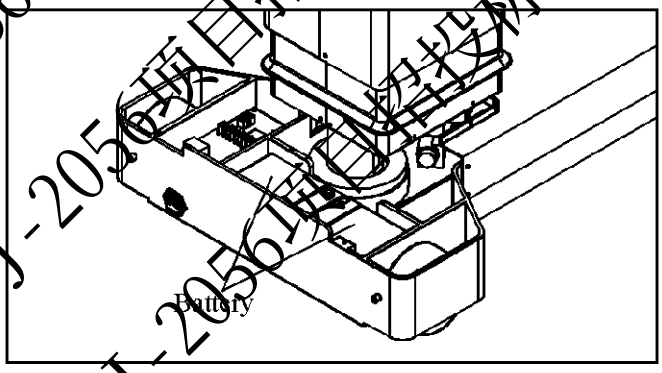

Fig. 6-2 Replacing battery

仅限于2017-ZHBJ-2056项目招标技术标使用
仅限于2017-ZHBJ-2056项目招标技术标使用
仅限于2017-ZHBJ-2056项目招标技术标使用

Disposal of Waste

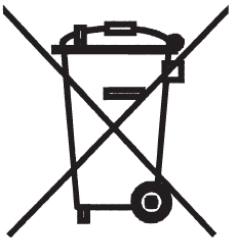

In accordance with the European directive 2002/96/CE of 01/27/2003 on waste electrical and electronic equipment, this device should be sent to a separate collection facility, not as unsorted municipal waste. To dispose of your device, you should use appropriate collection, reuse and recycling systems available in your region. By separating this product from other household-type waste, the volume of waste sent to incinerators or land-fills will be reduced and natural resources will thus be conserved. If you need information on these disposal systems, please contact your local waste administration.

仅限于2017-ZHBJ-2056项目招投标使用
仅限于2017-ZHBJ-2056项目招投标使用
仅限于2017-ZHBJ-2056项目招投标使用

7 Trouble shooting

⚠ **WARNING:** **No repair should ever be undertaken or attempted by anyone without proper qualifications and equipment.**

Symptom	Possible Cause	Recommended Action
Mains/AC indicator not lit	Mains/AC cable not connected	Connect the mains/AC cable
	Mains/AC cable broken	Replace mains/AC cable
	No power available from the mains/AC socket used.	Change to another mains/AC socket
	Fuses burned out	Replace fuses
Table top movement not correctly controlled.	Hydraulic system fault: Refill the oil	Refill the oil（32#）
	Hydraulic system fault: Replace the hydraulic elements	Replace the hydraulic elements
	Gas strut for head plate or leg plate damaged	Replace gas strut for head plate or leg plate
	Control electronics circuitry failure	Replace the electronic elements

仅限于2017-ZHBJ-2056项目招投标使用
仅限于2017-ZHBJ-2056项目招投标使用
仅限于2017-ZHBJ-2056项目招投标使用

仅限于2017-ZHBJ-2056项目招投标使用
仅限于2017-ZHBJ-2056项目招投标使用
仅限于2017-ZHBJ-2056项目招投标使用

8 Specifications and theory

8.1 Physical data

All the data are approximate values, and subject to change without prior notice.

⚠ **CAUTION:** **Do not put the OP830/330 table into an environment where it will experience shock.**

⚠ **WARNING:** **Do not lay the heavy stuff on the table top.**

Table top size	2040mm(L)×520mm(W)×680mm(H) (not include cushion)
Weight	260kg
Mains/AC cable	Rated voltage: 90-264VAC; Current capacity: 220-240VAC/10A; Type: three core cable (must be medical grade).

8.2 Environmental requirements

	Temperature	Relative Humidity	Atmospheric pressure
Working environment	5℃～40℃	≤80%	860hPa～1060hPa
Storage transportation environment	-40℃～55℃	≤95%	500hPa～1060hPa

⚠ **CAUTION:** **The equipment should be stored in well ventilated indoor spaces without the presence of either corrosive gases or strong magnetic fields.**

⚠ **CAUTION:** **If the transportation (storage) conditions exceed the specifications for Storage Transportation environment as shown above, the state from the transportation to the use need to be maintained in the operational environment for at least 8 hours.**

仅限于2017-ZHBJ-2056项目招投标使用
仅限于2017-ZHBJ-2056项目招投标使用
仅限于2017-ZHBJ-2056项目招投标使用

8.3 Technical definitions

Power	Supply voltage： ⎓ 24V/ ~220V、50Hz
	Fuses：RF1-20/F2A ~250V（For mains supply 2 pieces）、ATO-15A（For internal battery supply）
Operating Mode	Continuous operation with interval loading: loaded running time / interval time：4 min / 4 min
Electrical safety	Complies with “EN60601-1 Medical electrical equipment -- Part 1: General requirements for safety” and “EN60601-2-46 Medical electrical equipment -- Part 2-46: Particular requirements for the safety of operating tables”.
Equipment Classification	Per “EN60601-1 Medical electrical equipment -- Part 1: General requirements for safety”, OP830/330 Electronic Operating Table belongs to the following category: Class I, Internal Power; B-Type Application Part; Protection against splashing/water (IPX4); This equipment is not for use with flammable anesthetic gas mixtures of air, oxygen, and nitrous oxide; This equipment does not contain protection against defibrillation discharge; This equipment has not the function of signal input and output; Mobile equipment.
CE	Approved to meet the applicable requirements of the European Medical Device Directive so carries the CE Mark.

仅限于2017-ZHBJ-2056项目招标技术使用
仅限于2017-ZHBJ-2056项目招标技术使用
仅限于2017-ZHBJ-2056项目招标技术使用

8.4 Working theory

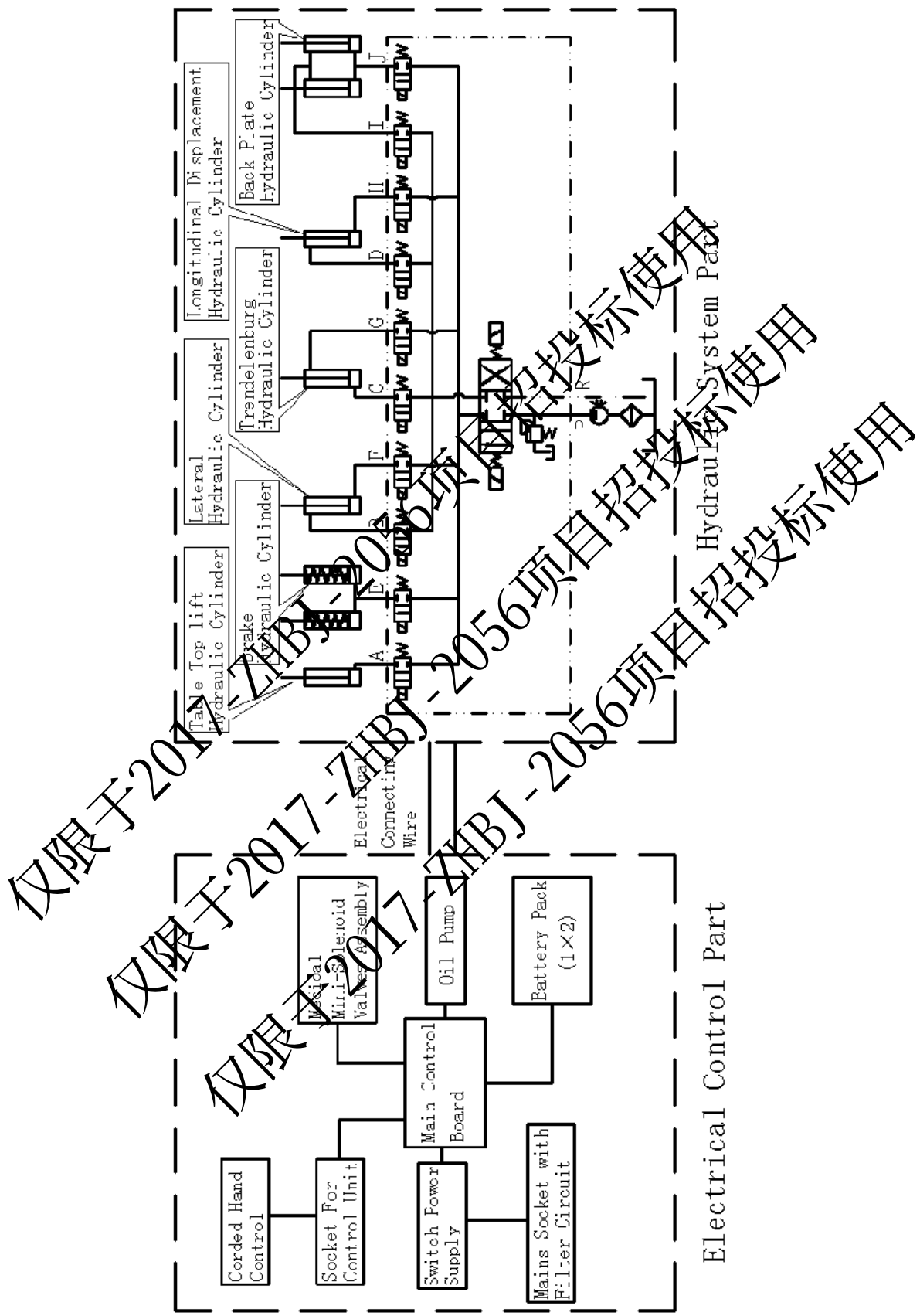

仅限于2017-ZHBJ-2056项目招投标使用

Fig. 8.1 Schematic diagram of OP830/330 electric operating table

The system design diagram for the Electronic Operating Table OP830/330 is shown as Fig. 8-1. The right half of the diagram shows the hydraulic system for the table, while the left half of it is the electrical control part.

The complete working system is composed of oil tank, oil filter, electrical-hydraulic pump, solenoid valves assembly, hydraulic pump cylinders, high-pressure oil pipes, and electrical control part etc..

As long as the function key of the control units is active, the electric circuit controls the electrical-hydraulic gear pump to run, drawing in the oil from oil tank, which enters the pump through the IN port of the pump. The oil is output through the OUT port of the pump, and the high-pressure oil pipe, to the solenoid valve assembly via port P. At the same time, through the electrical control part, one solenoid valve on the valves assembly is opened and the oil passes through this valve going to one chamber of the engaged hydraulic cylinder and pushes the piston to make it work. The piston moves the corresponding frame of the plate and shapes the table position. The oil in the other chamber of the engaged hydraulic cylinder will return to the oil tank through another solenoid valve and the R port of solenoid valves assembly.

The complete process is mastered by the electrical control system, which includes signal processing from the panel of control units and internal power monitoring. The power section uses dc and ac. When connected with external power supply, the entire system can be powered by battery charge using ac. When disconnected, the entire system is powered directly by the storage battery.

8.5 Main Specifications

Table top height adjustment:	Minimum: 680mm±20mm (cushion not included); Run distance: ≥270mm.
Head plate adjustment:	Upward: ≥30°;downward: ≥45°, detachable.
Back plate adjustment:	Upward: ≥75°；downward: ≥25°（OP830）; downward: ≥30°（OP330）.
Leg plate adjustment:	Downward: ≥90°; Upward: ≥5°；Separation angle after abduction: ≥180°, detachable.
Table top slope adjustment:	Trendelenburg: ≥30°; reverse-Trendelenburg : ≥30°.
Table top lateral tilting adjustment:	Left tilt: ≥20°; right tilt: ≥20°.
Kidney bridge elevation:	≥136mm。
Longitudinal displacment（OP830 only）:	300±10mm
Action controllers	1）The motions of the operating table are controlled by the corded hand control.
	2）The buttons' functions on the corded hand control should be reliable and could work both in the state that network power is disconnected (internal power supply) and in the network power.

仅用于2017-ZHBJ-2056项目招投标使用

	3）Two lights should be on the panel of the corded hand control: alternating current indicator (green) and battery status fully-charged indicator (green). When connected to network power, alternating current indicator lights. When the internal battery is charging，the battery status indicator will blink until the battery is fully charged. When the battery is fully charged, this indicator will stay fully light.
	4）Battery status low-charge indicator (red) should be on the panel of the corded hand control. When the internal battery is fully charged, battery status fully-charged indicator (green) lights; when the voltage is down to 21V±0.5V, battery status low-charge indicator (red) blinks to reflect the low power; when the voltage is down to 20V±0.5V or below, battery status low-charge indicator (red) lights to reflect the low charge.
Leakage	1）Seat plate loading：when 100kg is loaded on the seat plate, the table drop distance: ≤8mm.
	2）back plate loading：when 50kg is loaded on the back plate, the table drop distance: ≤8mm.
	3）Leg plate loading：when 25kg is loaded on the seat plate, the table drop distance: ≤8mm.
	4）Head plate loading：when 40kg is loaded on the seat plate, the table drop distance: ≤8mm.
Action stability	Various motions of the operating table should be smooth and avoid jitter or stick-slip phenomenon.
Table top sway	1）Longitudinal sway：≤15mm.
	2）Lateral sway：≤10mm.
	3）Horizontal lateral sway：≤18mm.
Transmittance	The table top and panel should be made of MDF and polyurethane materials, which could pass through X-ray, to do the radiography.
Table top payload	135kg
Table top secure payload	297kg
Head plate payload	40kg
Head plate secure payload	88kg
Leg plate(two) payload	50kg
Leg plate(two) secure payload	110kg

仅限于2017-ZHBJ-2056项目招投标使用

8.6 Electromagnetic Compatibility

Changing or reassembling this equipment without Aeonmed's authorization may cause electromagnetic compatibility problems. Please contact Aeonmed for assistance. The design and tests of OP830/330 fully comply with the regulations of the electromagnetic compatibility.

⚠ **WARNING:** **Using cell phones or other radio transmitting equipment near this product may cause a malfunction. Closely monitor the working condition of this equipment if there is any radio transmission source nearby.**

Using other electrical equipment on top of this system or nearby may cause interference. Check if the equipment works normally in these conditions before using it on a patient.

Be careful of the following when the Electronic Operating Table is connected:

Do not put any object which is not in accordance with EN 60601-1 within a 1.5m range of patients.

An isolation transformer must be used for the AC (alternating current) supply (in accordance with IEC60989), or additional protective ground wires must be connected if other devices (for medical or non-medical use) are connected to OP830/330 Electronic Operating Table by using a signal input/signal output cable.

If a portable all-purpose outlet is used as the alternating current supply, it must be in accordance with EN 60601-1-1 and cannot be put on the floor. Using a portable all-purpose outlet is not recommended.

Do not connect non-medical equipment directly to the alternating current outlet on the wall. An isolation transformer must be used with non-medical equipment. Otherwise, the surface leakage current of OP830/330 may exceed the range permitted by EN 60601-1 under normal conditions, and this may cause injury to patients or operators.

OP830/330 is equipped with all-purpose alternating current outlets for connecting other medical equipment. Do not connect non-medical equipment to these outlets. Otherwise, the surface leakage current may exceed the range permitted by EN 60601-1 under normal conditions and this may be dangerous to patients or operators.

A complete system current leakage test (according to EN 60601-1) must be performed after any equipment is connected to these outlets.

⚠ **WARNING:** **When medical electrical equipment operators contact non-medical electrical equipment and patients at the same time, it is dangerous for patients and operators.**

仅用于2017-ZHBJ-2056项目招投标使用

8.6.1 Guidance and manufacture's declaration – electromagnetic emission

The OP830/330 operating table is intended for use in the electromagnetic environment specified below. The customer of the user of the Op830/330 operating table should assure that it is used in such and environment.

Guidance and manufacture's declaration – electromagnetic emission		
The OP830/330 *operating table* is intended for use in the electromagnetic environment specified below. The customer of the user of the *Op830/330 operating table* should assure that it is used in such and environment.		
Emission test	**Compliance**	**Electromagnetic environment – guidance**
RF emissions CISPR 11	Group 1	The OP830/330 *operating table* uses RF energy only for its internal function. Therefore, its RF emissions are very low and are not likely to cause any interference in nearby electronic equipment.
RF emissions CISPR 11	Class A	The OP830/330 *operating table* is suitable for use in all establishments other than domestic and those directly connected to the public low-voltage power supply network that supplies buildings used for domestic purposes.
Harmonic emissions IEC 61000-3-2	Not applicable	
Voltage fluctuations/ flicker emissions IEC 61000-3-3	Not applicable	

仅限于2017-ZHBJ-2056项目招标技术使用
仅限于2017-ZHBJ-2056项目招标技术使用
仅限于2017-ZHBJ-2056项目招标技术使用

Immunity test	IEC 60601 test level	Compliance level	Electromagnetic environment guidance
Electrostatic discharge (ESD) IEC 61000-4-2	±6 kV contact ±8 kV air	±6 kV contact ±8 kV air	Floors should be wood, concrete or ceramic tile. If floor are covered with synthetic material, the relative humidity should be at least 30%.
Electrical fast transient/burst IEC 61000-4-4	±2 kV for power supply lines ±1 kV for input/output lines	±2 kV for power supply lines	Mains power quality should be that of a typical commercial or hospital environment.
Surge IEC 61000-4-5	±1 kV differential mode ±2 kV common mode	±1 kV differential mode ±2 kV common mode	Mains power quality should be that of a typical commercial or hospital environment.
Voltage dips, short interruptions and voltage variations on power supply input lines IEC 61000-4-11	<5% U_T for 0.5 cycle (>95% dip in U_T) 40% U_T for 5 cycles (60% dip in U_T) 70% U_T for 25 cycles (30% dip in U_T) <5% U_T for 5sec (>95% dip in U_T)	<5% U_T for 0.5 cycle (>95% dip in U_T) 40% U_T for 5 cycles (60% dip in U_T) 70% U_T for 25 cycles (30% dip in U_T) <5% U_T for 5sec (>95% dip in U_T)	Mains power quality should be that of a typical commercial or hospital environment. It is recommended that the OP830/330 operating table should be powered from an uninterruptible power supply or a battery.
Power frequency (50/60Hz) magnetic field IEC61000-4-8	3A/m	3A/m	Power frequency magnetic fields should be at levels characteristic of a typical location in a typical commercial or hospital environment.

NOTE: U_T is the ac mains voltage prior to application of the test level.

仅限于2017-ZHBJ-2056项目招投标使用

Immunity test	IEC 60601 test level	Compliance level	Electromagnetic environment - guidance
			Portable and mobile RF communications equipment should be used no closer to any part of the OP830/330 operating table including cables, than the recommended separation distance calculated from the equation applicable to the frequency of the transmitter.
Grounded RF IEC 61000-4-6	3 V_{rms} 150 kHz to 80 MHz out of ISM band	3 V_{rms}	**Recommended separation distance** $d = \left[\frac{3.5}{V_1}\right]\sqrt{P}$
	10 V_{rms} 150 kHz to 80MHz in ISM band	10 V_{rms}	$d = \left[\frac{12}{V_2}\right]\sqrt{P}$
Radiated RF IEC 61000-4-3	10 V/m 80 MHz to 2.5 GHz	10 V/m	$d = \left[\frac{12}{E_1}\right]\sqrt{P}$ 80 MHz to 800 MHz $d = \left[\frac{23}{E_1}\right]\sqrt{P}$ 800 MHz to 2.5 GHz According to the transmitter manufacturer, *P* is the maximum output power rating of the transmitter in watts (W) and *d* is the recommended separation distance in meters (m). Field strengths from fixed RF transmitters, as determined by an electromagnetic site survey, should be less than the compliance level in each frequency range. Interference may occur in the vicinity of equipment marked with the following symbol:

NOTE 1 At 80 MHz and 800 MHz, the higher frequency range applies.

NOTE 2 These guidelines may not apply in all situations. Electromagnetic propagation is affected by absorption and reflection from structures, objects and people.

a ISM bands (industrial, scientific and medical) range from 150KHz to 80MHz are respectively 6.765MHz to 6.795MHz, 13.553MHz to 14.567MHz, 26.957MHz to 27.283MHz and 40.66MHz to 40.70MHz.

仅限于2017-ZHBJ-2056项目招投标使用

b To establish the ISM band range from 150KHz to 80MHz and the frequency range from 80MHz to 2.5GHz precisely, the aim is to reduce the possibility of causing interference in the case that mobile/portable communication equipments are taken into the region of the patient inadvertently. To this end, when in the process of calculating the recommended separation distances of these transmitters, the 10/3 coefficient is used additionally.

c Field strengths from fixed transmitters, such as base stations for radio (cellular/cordless) telephones and land mobile radios, amateur radio, AM and FM radio broadcast and TV broadcast cannot be predicted theoretically with accuracy. To assess the electromagnetic environment due to fixed RF transmitters, an electromagnetic site survey should be considered. If the measured field strength in the location in which the system is used exceeds the applicable RF compliance level above, the system should be observed to verify normal operation. If abnormal performance is observed, additional measures may be necessary, such as re-orienting or relocating the system.

d Over the frequency range from 150 kHz to 80 MHz, field strengths should be less than 10 V/m.

仅限于2017-ZHBJ-2056项目招投标使用
仅限于2017-ZHBJ-2056项目招投标使用
仅限于2017-ZHBJ-2056项目招投标使用

8.6.2 Recommended separation distances

Recommended separation distances between portable and mobile RF communications equipment and the Op830/330 operating table

The OP830/330 operating table is intended for use in an electromagnetic environment in which radiated RF disturbances are controlled. The customer or the user of the OP830/330 operating table can help prevent electromagnetic interference by maintaining a minimum distance between portable and mobile RF communications equipment (transmitters) and the OP830/330 operating table as recommended below, according to the maximum output power of the communications equipment.

Rated maximum output power of transmitter (W)	**Separation distance according to frequency of transmitter (m)**			
	150 kHz to 80 MHz outside ISM bands $d=\left[\frac{3.5}{V_1}\right]\sqrt{P}$	**150 kHz to 80 MHz inside ISM bands** $d=\left[\frac{12}{V_1}\right]\sqrt{P}$	**80M to 800MHz** $d=\left[\frac{12}{E_1}\right]\sqrt{P}$	**800MHz to 2.5 GHz** $d=\left[\frac{23}{E_1}\right]\sqrt{P}$
0.01	0.12	0.12	0.12	0.23
0.1	0.37	0.38	0.38	0.73
1	1.17	1.20	1.20	2.30
10	3.69	3.79	3.79	7.26
100	11.67	12.00	12.00	22.99

For transmitters rated at a maximum output power not listed above, the recommended separation distance d in meters (m) can be estimated using the equation applicable to the frequency of the transmitter, where P is the maximum output power rating of the transmitter in watts (W) according to the transmitter manufacturer.

NOTE 1 At 80 MHz and 800 MHz, the separation distance for the higher frequency range applies.

NOTE 2 ISM bands (industrial, scientific and medical) range from 150KHz to 80MHz are respectively 6.765MHz to 6.795MHz, 13.553MHz to 14.567MHz, 26.957MHz to 27.283MHz and 40.66MHz to 40.70MHz.

NOTE 3 To establish the ISM band range from 150KHz to 80MHz and the frequency range from 80MHz to 2.5GHz precisely, when in the process of calculating the recommended separation distances of these transmitters, the 10/3 coefficient is used additionally. The aim is to reduce the possibility of causing interference in the case that mobile/portable communication equipments are taken into the region of the patient inadvertently.

NOTE 4 These guidelines may not apply in all situations. Electromagnetic propagation is affected by absorption and reflection from structures, objects and people.

仅限于2017-ZHBJ-2056项目招投标使用